INNOVATIVE FOOD DEFENSE PROGRAM

Improving Industry Food Emergency Recovery Capacity

Guidelines on Remediation and Restoration of Food Processing Facilities after an Intentional Contamination Event

North Carolina Department of Agriculture & Consumer Services
Steve Troxler, Commissioner

DRAFT GUIDANCE

INNOVATIVE FOOD DEFENSE PROGRAM

Table of Contents

Module

1. Introduction- Developing Industry Restoration and Remediation Response to Food Emergencies
2. Remediation Strategy
3. Characterize Incident
4. The Sanitation Process, Ingredients, and Storage for RTE Food Plants
5. Sanitary Personnel Practices
6. Cleaners and Cleaning Process
7. Sanitizing and Decontamination
8. Decontamination Analysis and Verification
9. Facility Characterization, Site Containment and Preparation
10. Contaminated Waste Disposal
11. Sanitary Equipment Design
12. Sanitary Food Plant Design and Construction
13. Risk Factors and Communication

DRAFT GUIDANDCE

INNOVATIVE FOOD DEFENSE PROGRAM

Disclaimer

The preparation of these documents has been funded by FDA under the Innovative Food Defense Program. The project team wishes to thank Jason P. Bashura and William Foust of the FDA Food Defense Oversight Team for their assistance in the development of these guidelines; also thanks to Tommy Woodard and Melanie Edwards of the NCDA&CS print shop for their contribution to making this publication possible.

These documents do not represent the official views of FDA or NCDA&CS and, as such, no product or technology endorsement should be inferred.

These guidance documents represent the authors' thinking on current technology, practices and procedures for remediation and restoration of food processing facilities after a microbial contamination event. They do not create or confer any rights for or on any person and do not operate to bind FDA, NCDA&CS or the public.

For more information on the Innovative Food Defense Program visit the U.S. Food and Drug Administrations Website at:
www.fda.gov/fooddefense

The project team consists of:

Wm. Mark Cosby, MS PhD
NCDA&CS
(Principal Investigator;
Food & Drug Protection Division)

Jim Howard
NCDA&CS
(Emergency Programs Division)

Adam Bumgarner
NCDA&CS
(Food & Drug Protection Division)

Stephanie Ngan
NCDA&CS
(Food & Drug Protection Division)

Roy Carawan, PhD
Professor Emeritus;
Department of Food, Bioprocessing,
and Nutrition Services,
North Carolina State University

Lynn Turner, PhD
Professor Emeritus;
Department of Food, Bioprocessing,
and Nutrition Services,
North Carolina State University

Innovative Food Defense Project
Printed August, 2012

Contact Dr. Cosby at 919-733-7366 (mark.cosby@ncagr.gov) for more information

Disclaimer:
Funding for this project was made possible, in part, by the Food and Drug Administration through grant 1R18FD004286-01, views expressed in written materials or publications and by speakers and moderators do not necessarily reflect the official policies of the Department of Health and Human Services; nor does any mention of trade names, commercial practices, or organization imply endorsement by the United States Government.

DRAFT GUIDANCE

1

INNOVATIVE FOOD DEFENSE PROGRAM

Innovative Food Defense

Guidelines for Remediation and Restoration of Food Processing Facilities after an Intentional Microbial Contamination Event

Food emergencies of all types, including intentional food contamination, can be broken into distinct phases: prevention and preparedness, detection, response, and recovery. Though arguably one of the most important elements of food emergencies, incident recovery has historically been deemphasized and underfunded as compared to preparedness and response.

Smith and Flatt have argued that disaster recovery is the least understood aspect of hazards management and the state's role is vague when compared to federal or local governments (8). Further, they point out that the lack of a sound, reliable state recovery policy results in poor recovery outcomes following disasters.

Poorly managed recoveries can lead to the closing of businesses, loss of economic productivity and employment, and perhaps most importantly, can lead to loss of consumer confidence in a commodity or the food supply in general. Additionally, the public may lose faith in the ability of food regulatory officials to ensure that products in the marketplace are safe. For example, the spinach recalls due to *E. coli* O157:H7 in 2006-2007 caused spinach manufacturers unrelated to the recall to file for Chapter 11 bankruptcy protection, and the market for all spinach products (regardless of recall status) declined precipitously (1,5). Indeed, one year after the recall, the spinach industry experienced a 350 million loss and a 20 percent reduction in sales from pre-recall levels (10). Likewise, the tomato (and later peppers) recalls in the summer of 2008, finally tracked to Salmonella enterica serotype Saintpaul adulterated peppers from Mexico are estimated to have cost Florida tomato growers 500 million dollars and caused an additional loss of 200 million to the produce industry in general as consumer demand dropped for fresh produce (2, 4).

With unintentional foodborne illness able to cause such widespread economic and social effects, intentional incidents possess the ability to be utterly catastrophic to the safety, security and public confidence of the food supply. The strain on public confidence due to government disaster response is best exemplified by public reaction to the 2001 terrorist attacks. After September 11, anthrax-contaminated letters were sent to various locations in Washington, D.C., New York and Palm Beach County, Florida. About 1,114 persons in Florida and approximately 3300 persons in Washington, D. C. were considered at risk and advised to undergo prophylactic antibiotic treatment for 60 days (3, 9). In all, close to 68 persons were infected and/or tested positive for anthrax via nasal swab although not all showed symptoms (6). Response and communication to these incidents by the US Postal Service, Public Health Departments and Centers for Disease Control (CDC) were confusing, incomplete, and sometimes contradictory. A deep sense of mistrust and confusion for these organizations is harbored by many involved in the attacks due to the lack of agreement on response, the lack of a consistent message due to changing opinions of health professionals, a lack of risk assessment by health professionals and overall perceived confusion, lack of focus, poor organization and publicized lack of agreement between professional health groups (3, 7). Clearly, an investment in disaster recovery planning is necessary and sorely needed and this holds true for any properly designed Food Defense Program.

With this in mind, The North Carolina Department of Agriculture & Consumer Services [NCDA&CS] Food & Drug Protection Division (FDPD) was awarded a grant under the Innovative Food Defense Projects (R18) of the FDA to develop guidelines to instruct food processors how to create a remediation strategy to deal with contamination incidents in their products and facilities before such events occur. FDPD has been actively developing and implementing innovative food safety and defense programs for a period of ten years, including the successful development of an all-hazards and interdisciplinary Rapid Response Team (RRT) also with support from FDA. NCDA&CS believes in proactive and collaborative initiatives to prevent and mitigate the impact of

food emergencies on North Carolina citizens and industries.

Scope of the Restoration and Remediation Guidelines – A truly comprehensive set of guidelines for the remediation of food processing facilities would encompass all risks due to microbiological, chemical and radiological contamination. That is beyond the range of this project and therefore the intent of these guidelines is to focus on microbiological contamination incidents in the ready-to-eat (RTE) food market. In our experience, most Class I recalls are caused by microbiological contamination of RTE foods.

Purpose of the Restoration and Remediation Guidelines – According to the FDA Innovative Food Defense Program, "IFDP continually seeks to support innovative concepts, projects or novel solutions to address gaps in, or provide enhancement to, food defense efforts nationwide. As we continue to move forward in meeting our food defense goals by increasing preparedness, developing response plans, and ensuring we have the tools to facilitate recovery, we must also integrate these approaches into our existing food safety infrastructure". Consequently, the purpose of these guidelines is to educate the food production community of North Carolina in the most effective and efficient means to restore production capacity after an intentional or unintentional contamination event. We have strived to develop a comprehensive framework of information which food producers can use to build a restoration/remediation plan that will best fit their specific needs. We feel that this information will be useful to producers in updating their current sanitation and decontamination sanitary SOP to facilitate reducing the risk of contamination during day to day operation.

Legal Parameters of Recalls of Adulterated Foods

In accordance to FDA Investigations Operations Manual (IOM), Chapter 7.1, a recall is:
"A firm's removal or correction of a marketed product that FDA considers to be in violation of the laws it administers, and against which the Agency would initiate legal action (e.g., seizure). Recall does not include a market withdrawal or a stock recovery. See Agency recall policy outlined in 21 CFR 7.1/7.59 – Enforcement Policy (Including Product Corrections) – Guidance on Policy, Procedures and Industry Responsibilities."

A Class I recall is: "a situation in which there is a reasonable probability that the use of, or exposure to, a violative product will cause serious adverse health consequences or death."

Adulterated Foods – Adulteration is a term used to define food that is unsafe for human consumption. According to the Food, Drug and Cosmetic Act Section 402 (21USC:342):
A food shall be deemed adulterated:

- If it bears or contains any poisonous or deleterious substance which may render it injurious to health; but in case the substance is not an added substance such food shall not be considered adulterated under this clause if the quantity of such substance in such food does not ordinarily render it injurious to health; [or]
- If it bears or contains any added poisonous or added deleterious substance (other than a substance that is a pesticide chemical residue in or on a raw agricultural commodity or processed food, a food additive, a color additive, or a new animal drug) that is unsafe….
- If it bears or contains a pesticide chemical residue that is unsafe…
- If it is or if it bears or contains (i) any food additive that is unsafe….or a new animal drug (or conversion product thereof) that is unsafe…
- If it consists in whole or in part of any filthy, putrid, or decomposed substance, or if it is otherwise unfit for food;
- If it has been prepared, packed, or held under insanitary conditions whereby it may have become contaminated with filth, or whereby it may have been rendered injurious to health;
- If it is, in whole or in part, the product of a diseased animal or of an animal which has died otherwise than by slaughter;
- If its container is composed, in whole or in part, of any poisonous or deleterious substance which may render the contents injurious to health;

The complete definition can be reviewed at: http://www.fda.gov/RegulatoryInformation/Legislation/FederalFoodDrugandCosmeticActFDCAct/FDCActChapterIVFood/ucm107527.htm?utm_campaign=Google2&utm_source=fdaSearch&utm_medium=website&utm_term=adulterated&utm_content=10#ftn2

In general, any RTE-food that contains a pathogen will be deemed "adulterated" because the pathogen is considered an added "poisonous or deleterious substance which may render it injurious to health". Once a food is deemed adulterated, FDA and FSIS have the legal power to seize and condemn the product, prevent the facility from manufacturing or distributing the product and detain any imported product. In addition, Section 206 of the Food Safety Modernization Act passed in January, 2011 now gives federal officials the authority to demand mandatory product recalls if the firm refuses to recall voluntarily.

Restoration and Remediation Guidelines

The goal of any recovery process is to decontaminate, rehabilitate and restore food processing facilities and salvageable equipment and reinstate the consumer's confidence in the food product(s) and companies affected. Some objectives to be addressed are:

- Ensuring that safety of all workers involved and risks to other persons and the environment are minimized
- Work hand-in-hand with law enforcement authorities in case the incident may be a bioterror or other intended action
- Select the most appropriate cleaning/ sanitation methods for the facility; determined by type of contamination, building materials in the facility and food commodity
- Ensure the contaminant is not further spread during the recovery
- Determine the most likely cause of contamination and evaluate production process, equipment, and/or security changes and improvements to lessen the risk of a second incident
- Ensure that the facilities, equipment and other infrastructure are returned to working conditions as good as or better than the conditions prior to the incident
- Facilitate the start up of the facility once decontamination measures have been validated and verified
- Confirm that all waste materials, contaminated raw ingredients or product, supplies and/or equipment are properly and safely disposed
- Monitor the resumption of commodity production and testing and validation of product safety and wholesomeness
- Monitor marketing, public relations and consumer outreach once the facility is operational

Recovery Model Module Design

The development of any recovery process will depend on numerous and specific factors unique to a particular incident and therefore the recovery process designs presented in these modules attempt to encompass as many food defense and food safety scenarios as feasible. Our goal is that these modules be generic enough to be used by any federal, state or tribal institution required to respond to an event, but to also contain information on the latest technology of cleaning, sanitation, and remediation of food processing facilities. These modules will focus on microbiological incidents. The guidelines in these modules are subject to change as the technology of equipment, analytical procedures, sanitation, and decontamination advances. Below are some important factors to be considered when designing recovery/remediation models:

Characterize Incident – intentional (Food Defense) or unintentional (Food Safety)

Characterization of agent (partially accomplished during response phase)

- Virulence
- Environmental persistence
- Susceptibility to inactivation

Effected site/facility characterization

- Enclosed /Semi-enclosed: types of building materials and surfaces at effected site
- Plumbing systems
- HVAC systems
- Extent of equipment effected
- Refrigeration or freezer storage of raw materials or product
- Cleaning/Sanitation procedures; wet or dry
- Food product; Ready to eat or preparation required

Possible route of exposure and entry to facility

- Airborne
- Water
- Raw materials
- Pest
- Workers/visitors

Site containment and preparation

- Secure contaminated areas and limit access to required personnel

- Install temporary walls to isolate areas as required
- Assemble worker decontamination unit
- Install air handling and testing units as required
- Establish defined offsite area for cleaning items removed from contaminated area
- Establish defined area for short term storage of supplies and waste components

Risk factors at site
- Determine the virulence of the contaminant and risk of infection to personnel at the site
- Determine the safety risks of any chemicals or equipment to be used during the restoration process
- Determine level of PPE required for personnel
- Establish standard work zone for worker protection and to limit accidental spread of the contaminant

Risk Communication
- Establish Information Center to develop and release information to employees and media
- Characterization Environmental Sampling and Analysis Plan
- Specify minimum number of samples to adequately determine extent of contamination
- Ensure laboratory capacity for testing all samples
- Ensure proper chain of custody and data processing

Clearance Goals
- Clearance goals are the goals and predictions of what exactly is the expected result after the remediation process. These goals should be designed before any work begins to insure that residual risks are reduced to levels consistent with risk management rationales as determined by state, federal, and local officials

Decontamination Plan
- Identify areas requiring decontamination (i.e., entire facility or specific areas in facility)
- Identify proper cleansers, sanitizers and equipment required
- Determine proper conditions for effective decontamination (i.e., contact time, temperature)
- Identify toxicities of decontamination chemicals and proper handling and use
- Determine requirements for verification of decontamination process
- Ascertain time and costs required to complete decontamination process
- Communicate the decontamination process with employees and media

Remediation Strategy
The remediation strategy is the overall plan including site preparation and containment, clearance goals, decontamination, and safety in addition to:
- Decontamination verification
- Waste disposal
- Environmental sampling and analysis to confirm clearance goals
- Present all pertinent data to federal, state and local officials for approval to open facility
- Advise on long term facility enhancements and renovations (i.e., security, air handling, raw material storage, employee hygiene practices)

The authors hope the material presented in these guidelines will aid food processors in developing strategic plans for remediation of their facility in the event of contamination and also help them develop or improve sanitary procedures currently in place to reduce the risk of contamination.

Innovative Food Defense Project Team

The project team consists of:

Wm. Mark Cosby, MS PhD
NCDA&CS
(Principal Investigator;
Food & Drug Protection Division)

Jim Howard
NCDA&CS
(Emergency Programs Division)

Adam Bumgarner
NCDA&CS
(Food & Drug Protection Division)

Stephanie Ngan
NCDA&CS
(Food & Drug Protection Division)

Roy Carawan, PhD
Professor Emeritus;
Department of Food, Bioprocessing,
and Nutrition Science,
North Carolina State University

Lynn Turner, PhD
Professor Emeritus;
Department of Food, Bioprocessing,
and Nutrition Science,
North Carolina State University

Support

This worked was funded by the FDA Innovative Food Defense Program. The project team wishes to thank Jason P. Bashura and William Foust of the FDA Food Defense Oversight Team for their assistance in the development of these guidelines.

References

1. Associated Press. 2007. Safety concerns follow *E. coli* outbreak. Los Angeles Times. http://articles.latimes.com/2007/feb/05/business/fi-vegsurvey5

2. Bayles, T. 2008. Tomato growers fault FDA for losses. Sarasota Herald-Tribune. http://www.heraldtribune.com/article/20080701/BUSINESS/178192014/1537

3. Blanchard, J., Y. Haywood, B. D. Stein, T. L. Tanielian, M. Stoto, and N. Lurie. 2005. In Their Own Words: Lessons Learned From Those Exposed to Anthrax. Amer. J. Public Health. 95(3) 489.

4. CBS News. 2008. Report: Tainted Peppers Didn't Alarm FDA. http://www.cbsnews.com/stories/2008/08/19/health/main4361625.shtml

5. Chediak, M. 2006. Spinach recall tips broker into Chapter 11. Orlando Sentinel. http://articles.orlandosentinel.com/2006-10-18/business/SPINACH18_1_1_spinachcommissary-agency-defense-commissary

6. Cymet, T. C. and G. Kerkvliet. 2004. What is the True Number of Victims of the Postal Anthrax Attack of 2001? J. Amer. Osteopath. Assoc. 104(11) 452.

7. Quinn, S. C., T. Thomas, and S. Kumar. 2008. The Anthrax Vaccine and Research: Reactions from Postal Workers and Public Health Professionals. Biosecurity and Bioterrorism: Biodefense Strategy, Practice, and Science 6(4) 321.

8. Smith, G. and V. B. Flatt. Assessing the Disaster Recovery Planning Capacity of the State of North Carolina. Institute for Homeland Security Solutions. January 2011. https://www.ihssnc.org/portals/0/Documents/VIMSDocuments/IHSS_Research_Brief_Smith.pdf

9. Treager, M. S., S. T. Wierma, N. E. Rosenstein, J. M. Malecki, C. W. Shepard, P. T. Raghunathan, S. P. Pillai, T. Popvic, C. P. Quinn, R. F. Meyer, S. R. Zaki, S. Kumar, S. M. Bruce, J. J. Sejvar, P. M. Dull, B. C. Tierney, J. D. Jones, B. A. Perkins, and the Florida Investigation Team. 2002. First Case of Bioterrorism- Related Inhalational Anthrax in the United States, Palm Beach County, Florida, 2001 Emerg. Infect. Dis. 8(10) 1029.

10. Weise, E and J. Schmit. 2007. Spinach recall: 5 Faces. 5 agonizing deaths. 1 year later. USA Today. http://www.usatoday.com/money/industries/food/2007-09-20-spinachmain_N.htm

Notes

Notes

Innovative Food Defense Project

Contact Dr. Cosby at 919-733-7366 (mark.cosby@ncagr.gov) for more information

Disclaimer:
Funding for this project was made possible, in part, by the Food and Drug Administration through grant 1R18FD004286-01, views expressed in written materials or publications and by speakers and moderators do not necessarily reflect the official policies of the Department of Health and Human Services; nor does any mention of trade names, commercial practices, or organization imply endorsement by the United States Government.

DRAFT GUIDANCE

2

INNOVATIVE FOOD DEFENSE PROGRAM

Remediation Strategy

Remediation strategy is the overall plan for the restoration of a food facility after a contamination event has occurred. In Section 103 of the Food Safety Modernization Act, it states:

> ''(a) In General. - The owner, operator, or agent in charge of a facility shall, in accordance with this section, evaluate the hazards that could affect food manufactured, processed, packed, or held by such facility, identify and implement preventive controls to significantly minimize or prevent the occurrence of such hazards and provide assurances that such food is not adulterated…''
>
> ''(b) Hazard Analysis.—The owner, operator, or agent in charge of a facility shall—
>
> ''(1) identify and evaluate known or reasonably foreseeable hazards that may be associated with the facility, including—
>
> ''(a) biological, chemical, physical, and radiological hazards, natural toxins, pesticides, drug residues, decomposition, parasites, allergens, and unapproved food and color additives; and
>
> ''(b) hazards that occur naturally, or may be unintentionally introduced; and ''(2) identify and evaluate hazards that may be intentionally introduced, including by acts of terrorism; and ''(3) develop a written analysis of the hazards.
>
> ''(c) Preventive Controls.—The owner, operator, or agent in charge of a facility shall identify and implement preventive controls, including at critical control points…''
>
> ''(d) Monitoring of Effectiveness.—The owner, operator, or agent in charge of a facility shall monitor the effectiveness of the preventive controls implemented under subsection (c) to provide assurances that the outcomes described in subsection (c) shall be achieved…''

In addition, the act also specifies corrective actions that must be taken in Section 103 (e):

> ''The owner, operator, or agent in charge of a facility shall establish procedures to ensure that, if the preventive controls implemented under subsection (c) are not properly implemented or are found to be ineffective— ''(1) appropriate action is taken to reduce the likelihood of recurrence of the implementation failure; ''(2) all affected food is evaluated for safety; and ''(3) all affected food is prevented from entering into commerce if the owner, operator or agent in charge of such facility cannot ensure that the affected food is not adulterated….''

And finally, the act specifies verification of corrective actions:

> ''(f) Verification.—The owner, operator, or agent in charge of a facility shall verify that—
>
> ''(1) the preventive controls implemented under subsection (c) are adequate to control the hazards identified under subsection (b); ''(2) the owner, operator, or agent is conducting monitoring in accordance with subsection (d); ''(3) the owner, operator, or agent is making appropriate decisions about corrective actions taken under subsection (e); ''(4) the preventive controls implemented under subsection (c) are effectively and significantly minimizing or preventing the occurrence of identified hazards, including through the use of environmental and product testing programs and other appropriate means…''

In short, the Food Safety Modernization Act specifies that food processors, in addition to preventative plans, must also develop restoration/remediation plans to be implemented in case of

a contamination event. It is the sole responsibility of the "owner, operator, or agent in charge of a facility" to ensure plans are developed and put in place before a contamination event occurs. These guidelines are intended to cover all aspects of remediation planning and assist food processors in the development of these plans.

Who Should Follow The Guidance in these Documents?

A remediation strategy plan is ultimately the responsibility of the owner(s) of RTE-food processing facilities. Facility managers, quality assurance and quality control personnel should initiate and develop the plan and would benefit by following the guidance documents in this series. Facility supervision personnel should provide training sessions for all employees in the implementation of preventative and remediation plans adopted. It is our hope that all RTE-foods processors will benefit from following these recommendations to help avoid the product contamination/plant closure scenario.

How Do these Documents Relate to the FDA GMPs and Other Regulations?

These documents are not meant to supersede any FDA guidelines, requirements or recommendations. The guidance and recommendations in this and all accompanying documents are meant to compliment those of current GMPs and the newly adopted Food Safety Modernization Act. Any regulations currently required by FDA must be followed.

Aspects of the Remediation Strategy

Characterize Incident – intentional (Food Defense) or unintentional (Food Safety)

- If intentional contamination is suspected, law enforcement officials must be consulted and any restoration process must be approved by law officials in charge before any action can take place. This is required to insure that any evidence of intentional contamination be preserved for future prosecution

Clearance Goals

- Clearance goals are the goals and predictions of what exactly is the expected result after the remediation process. For example, while pathogen elimination is expected, complete sterility in the facility is unachievable. So, what is the expected bacterial load after cleaning and sanitation? Is an analysis of total bacterial load in the facility even required, or is demonstration and verification of sound cleaning and sanitizing procedures sufficient? What are the specific requirements of local, state and federal officials to insure the remediation process is complete? What are the requirements for waste storage and disposal?

  Clearance goals should be designed to insure that residual risks are reduced to levels consistent with risk management rationales as determined by state, federal, and local officials and approved by those officials before work begins.

Characterization of contamination agent

- Bacteria, virus, sporeforming bacteria, or parasite
- Virulence
- Environmental persistence
- Susceptibility to inactivation

Effected site/facility characterization

- Enclosed /Semi-enclosed: types of building materials and surfaces at effected site
- Plumbing systems
- HVAC systems
- Extent of equipment effected
- Refrigeration or freezer storage of raw materials or product
- Cleaning/Sanitation procedures; wet or dry
- Food product; Ready to eat or preparation required

Possible route of exposure and entry to facility

- Airborne
- Water
- Raw materials
- Pest
- Workers/visitors
- Poor building structure

Site containment and preparation

- Secure contaminated areas and limit access to required personnel
- Install temporary walls to isolate areas as required
- Assemble worker decontamination unit
- Install air handling and testing units as required
- Establish defined offsite area for cleaning items removed from contaminated area
- Establish defined area for short term storage of supplies and waste components

Risk factors at site

- Determine the virulence of the contaminant and risk of infection to personnel at the site
- Determine the safety risks of any chemicals or equipment to be used during the restoration process
- Determine level of PPE required for personnel
- Establish standard work zone for worker protection and to limit accidental spread of the contaminant

Risk Communication

- Plan for an Information Center to develop and release information to employees and media

Characterization of Environmental Sampling and Analysis Plan

- Determine type of sampling required to achieve the clearance goals
- Specify minimum number of samples to adequately determine extent of contamination and verification of decontamination
- Ensure laboratory capacity for testing all samples
- Ensure proper chain of custody and data processing

Decontamination Verification

- Insure that all decontamination procedures are verified according to the Food Safety Modernization Act Section 103 (f) and have been approved by all relevant local, state, and federal officials

Waste Disposal

- Insure that all contaminated product, equipment, and cleaning and sanitization supplies are disposed of in a manner that meets all local, state, and federal requirements

Records and Data Management

- It is vital that all records pertaining to the remediation process, including daily logs of personnel and equipment sanitation, PPE use, proper storage and disposal of cleaning/sanitation equipment and supplies, storage and disposal of contaminated product, and cleaning and decontamination sampling results but kept in an easily accessible format for presentation to federal, state and local officials for approval to open facility

These recommendations are not meant to be all-inclusive but rather a starting point for facility owners, managers and supervisors to develop their own remediation strategy which will fit their particular needs.

Notes

Innovative Food Defense Project

Contact Dr. Cosby at 919-733-7366 (mark.cosby@ncagr.gov) for more information

Disclaimer:
Funding for this project was made possible, in part, by the Food and Drug Administration through grant 1R18FD004286-01, views expressed in written materials or publications and by speakers and moderators do not necessarily reflect the official policies of the Department of Health and Human Services; nor does any mention of trade names, commercial practices, or organization imply endorsement by the United States Government.

DRAFT GUIDANCE

3

INNOVATIVE FOOD DEFENSE PROGRAM

Characterize Incident

Once a contamination event has been discovered and traced to your food processing facility, the incident must be characterized so that the proper response can be activated as soon as possible, after securing the facility and any suspected contaminated product. This may encompass many aspects but the main features are; 1) is the incident accidental or intentional (bioterrorism) 2) identity of contaminant, 3) What is the route of entry to the facility 4) What is the contaminant distribution in the facility, 5) is the contaminant commonly or rarely found in your type of product, 6) Is contaminant distribution sporadic, seasonal or uniform, 7) What practices (or lack thereof) may have contributed to the contamination event.

Who Should Follow The Guidance in these Documents?

Characterization of the contamination incident is just one part of the remediation strategy plan and is ultimately the responsibility of the owner(s) of RTE-food processing facilities. Facility managers, quality assurance and quality control personnel should initiate and develop these plans and would benefit by following the guidance documents in this series. Facility supervision personnel should provide training sessions for all employees in the implementation of preventative and remediation plans adopted. It is our hope that all RTE-foods processors will benefit from following these recommendations to help avoid the product contamination/plant closure scenario.

How Do these Documents Relate to the FDA GMPs and Other Regulations?

These documents are not meant to supersede any FDA or USDA guidelines, requirements or recommendations. The guidance and recommendations in this and all accompanying documents are meant to compliment those of current GMPs and the newly adopted Food Safety Modernization Act. Any regulations currently required by FDA or USDA must be followed.

1. Is the contamination incident accidental or intentional (bioterrorism)

Determining whether the incident was accidental or intentional is difficult but very important in determining the restoration/remediation process. If accidental, the processor can use their remediation plan in accordance with their established sanitary SOP and advice from local, state and federal officials. If an intentional contamination is suspected, law enforcement officials must be consulted and any restoration process must be approved by law officials in charge before any action can take place. This is required to insure that any evidence of intentional contamination be preserved for future prosecution.

2. Identify the contaminant

Foodborne/Waterborne Gram negative pathogenic bacteria.

These organisms are non-sporeforming but can persist in a dormant, non-growing state for years in soil and on surfaces. They also have a low infective dose.

Salmonella - Common in all animals, raw meats, poultry, seafood. Raw vegetables, nuts and spices are also carriers, probably due to environmental or human contamination. Environmental reservoirs include soil, water, fecal matter, insects and other pests. Salmonella may contaminate a variety of foods including Ready-to-Eat (RTE) items such as cream-filled desserts and toppings, spices, dried soups, peanut butter, cocoa, and chocolate. Salmonella typhi and paratyphi are particularly important since they can cause typhoid fever and humans are the only known host.

Campylobacter – Common to livestock and poultry, other wild and domestic animals but also found in shellfish, water and unpasteurized milk. Campylobacter may not survive as long as Salmonella on environmental surfaces. Wild and domesticated animals serve as reservoirs of contamination as well as sediment, holding ponds, and agricultural watersheds.

Shiga Toxin producing E. coli (STEC)– Also called enterohemorrhagic *E. coli* or EHEC, the most widely known being *E. coli* O157:H7. This organism is common in livestock and wild animals, raw or undercooked meats. Also found in seed/bean sprouts, lettuce, sausages, cheese and raw milk. Environmental reservoirs include soil, water, fecal matter, insects and other pests. Further, in 2012 the FSIS started requiring meat processors to test for six non-O157 STEC serogroups; O26, O45, O103, O111, O121 and O145.

Other bacteria in this group include Shigella (water and raw vegetables), Vibrio (water, fish & shellfish), and Yersinia (water, soil, animals, meats, and seafood)

Foodborne/Waterborne Gram positive pathogenic bacteria.

These organisms are also non-sporeforming but can persist in a dormant, non-growing state for years in soil and on surfaces.

Listeria monocytogenes – Many birds and mammals (including humans) can be carriers of *L. monocytogenes*. It can contaminate a variety of foods including RTE items as smoked fish, prepared salads, cheese, sprouts, cooked meat, poultry, and delicatessen meats. Also found in milk, raw vegetables and ice cream. Environmental reservoirs include soil, water, and feces. It can grow at refrigerated temperatures which make it especially important in medium to long shelf life RTE foods. *L. monocytogenes* causes 19% of all deaths attributed to foodborne illness.

Staphylococcus aureus – Staphylococcal food poisoning is caused by toxins produced by the organism when the population reaches about 100,000 bacteria per gram of food. Growth and toxin production will occur when foods are held between 45°F and 140°F. The toxin is highly heat resistant and infectious dose can be as low as 1.0 microgram. Humans and animals are the primary contamination sources but the organism can also be found in dust, air, water, sewage, equipment and surfaces. Poultry, meat and egg products are commonly involved in staphylococcal food poisoning. This includes RTE products such as delicatessen salads and sandwiches (egg, tuna, macaroni, etc.), cream filled bakery items (éclairs, cream pies, etc.) and dairy products. Any foods that require a lot of handling during preparation and held at improper temperatures are prime candidates for Staphylococcal food poisoning.

Foodborne/Waterborne sporeforming bacteria.

Bacillus cereus – *B. cereus* food poisoning can be caused by one of two toxins produced in temperature abused foods. Toxin production is suspected when the population exceeds 1,000,000 bacteria per gram of food. Meats, milk, fish, vegetables, and rice are associated with this type of food poisoning. Prepared RTE foods such as sauces, puddings, gravies, pasta, salads, soups, and casseroles are common sources of *B. cereus* intoxication. As a sporeformer, *B. cereus* is widespread in the environment, found in soil, sediments, vegetation, insects and animals, and cereal grains.

Clostridium perfringens – Perfringens food poisoning most often occurs in institutional settings (nursing homes, schools, prisons, etc) but can occur in any product when large quantities of food are prepared and improperly held between 45°F and 140°F for several hours. This allows the organism to grow to large numbers (about 1.0 – 0.1 million per gram food). Once ingested,

the organism produces toxin in the gut causing abdominal cramps and diarrhea. Common food sources are fish, poultry, soups, gravies, meat roasts, stews, and dried soups/gravy mixes. Widely distributed in soil, water sediments, compost, and decaying vegetation. Humans, animals and insects can carry the organism in their gastrointestinal tracts.

Clostridium botulinum – Botulism, caused by a neurotoxin produced in food by *C. botulinum* is rare but its mortality rate is high. Thus, suspected presence of the organism or neurotoxin in food will cause an immediate response by federal, state, and local officials. The toxin is heat sensitive and will be destroyed when food is heated to 80°C (176°F) for 10 minutes or more. Low acid, home canned food products are the common source of poisoning but inadequately processed commercial foods have been involved in outbreaks and recalls. Canned vegetables, meat products, vegetable flavored oils, and seafood are most often the cause of the disease. Spores of *C. botulinum* are common throughout the environment including soil and sediments.

Foodborne/Waterborne viruses

Norovirus – Norovirus food contamination can occur during harvest (fruits and vegetables) contamination, during preparation by an infected food handler (RTE-foods) or contaminate shellfish through infected water. Some persons may be asymptomatic during their infection which can increase the risk of contamination by food handlers. Norovirus is estimated to cause 11% of all deaths due to foodborne infection.

Hepatitis A – Hepatitis A virus can survive in water and surfaces for days to months. Similar to Norovirus, foods are most often contaminated by an infected food handler. Ice, water, fruits, vegetables, shellfish, and take-out foods are common sources of infection. Hepatitis A does not become a chronic infection as does hepatitis B and C.

Foodborne/Waterborne parasites

The four food and waterborne protozoan parasites found in the United States are Toxoplasma, Cryptosporidium, Cyclospora and Giardia (Entamoeba is common in tropical and subtropical Central America and Mexico). Any of these parasites can be found in soil and water contaminated with human or animal feces in a resistant cell form similar to bacterial spores called cysts or oocysts which can survive many months. The elderly, young, and immunocompromised persons are particularly susceptible to severe illness and death from these parasites. In fact, *Toxoplasma gondii* causes 24 % of all deaths attributed to foodborne illness. Also, in 1993 Cryptosporidium contaminated the drinking water of Milwaukee, WI resulting in 400,000 illnesses and at least 100 deaths of the elderly and AIDS patients.

Many humans and animals can be asymptomatic carriers which makes fecal contamination of soil and water so important. Contamination of food occurs by infected food handlers, fields treated with livestock slurry or manure, contaminated irrigation, wash, and rinse waters. Common foods associated with protozoan parasites are produce; raspberries and other berries, lettuce, fresh herbs; unpasteurized fruit juices and milk. Toxoplasma can also be found in muscle tissue of livestock and other animals; pork is considered a main source of human infection.

3. What was the route(s) of entry of the contaminant into the facility

There are many ways a contaminant can enter a facility and establish itself into microbial niches.

- Raw goods and ingredients – Any ingredient should be considered a possible contaminant carrier, especially if it is not subject to a "kill-step".
- Transport equipment – this includes forklifts, pallet jacks, hand trucks; essentially anything with wheels. This is especially important if these conveyances move between "post-kill" and "pre-kill"

areas such as raw storage areas, loading docks, etc. Plastic and wooden pallets are a prime source for contamination.

- Tools – Maintenance tools and toolboxes can be a significant source of contamination, particularly if they are moved around the facility from raw goods areas to finished product areas. This includes ladders, brooms, squeegees, fatigue rugs, mops and buckets.
- Personnel/visitors – Anyone entering the facility is capable of bringing contaminants in, inadvertently, or purposefully in the case of a bioterrorism event. They can be carried on shoes, clothing, handbags, jewelry, and briefcases. This can be especially true for outside maintenance contractors when bringing in tools and equipment to the facility.
- Pests – Birds, rodents, and insects
- Air flow – air flow from raw storage/ processing areas to finished processing areas creates a risk of contamination as does unfiltered air intake from the environment.
- Water – Any water supply is suspect to carrying contaminants; wash and rinse water for sanitation or product rinses (fruits/vegetables) and water in holding/cooling tanks are vulnerable to contamination. Municipal or local well water can transport contaminants into the facility. Sewage water from drains or other plumbing backflow is especially suspect.
- Poorly maintained facility – Leaky roofs, improper plumbing and air handling, loose or insecure doorjambs, roll up door or windows, cracked concrete and flooring. Emergency or auxiliary doors in routine use to enter or exit the facility.
- Facility construction – Any construction within the facility involving cutting floors, walls, air ducts, pipes and ceilings or replacing equipment is liable to disturb protected sites in the facility where contaminants have lain dormant for years.

4. Dispersal of contaminant in facility

Once a contaminant has gained entry to the facility it can be dispersed and spread throughout the installation by a number of ways.

- Traffic: employee and equipment – Contamination can spread to different areas of the facility depending on the traffic flow within. It is very common to have contaminants in the raw storage area carried to finished product areas if foot and/or vehicular traffic is allowed to flow in that direction. Likewise, tools used in a contaminated area can carry contamination wherever they go.
- Sanitation practices – Pressurized air or water hoses can easily dislodge organisms from contaminated areas and spread them throughout the room. Contaminated brooms, mops, squeegees and standing water are particularly important factors in dispersal. Improper employee hand sanitation also disperses contamination.
- Air flow – Improper air flow can carry a contaminant throughout the installation. This includes any floor or wall-mounted fans used for cooling product or temperature control.

5. Is the contaminant rare or common in the food product

Determining the commonality of a specific contamination in a product will help determine the source of the contamination. For example: Listeria is a fairly common contaminant in RTE-products produced in a wet-clean facility but not common in bakery products (without dairy ingredients). For example, *L. monocytogenes* contamination of flour tortillas may point to contamination via handling. Cryptosporidium is often associated with irrigation and wash/rinse water in the food industry and raw fruits or vegetables or products containing raw fruits or vegetables are at higher risk of Cryptosporidium contamination than most other products. Therefore, a Cryptosporidium outbreak in cheese (made from pasteurized milk) would be considered rare and again, food handling or water within the facility would be suspects of the contamination.

6. Is the contaminant seasonal, uniform or sporadic

   The time frame of the contaminant's appearance may have a bearing on the remediation strategy. For example, a seasonal contamination may point to a problem with raw product. Sporadic appearances could suggest the contaminant is already established in the facility and certain maintenance or other procedures are disrupting areas where it has laid dormant, possible for years.

7. What production practices may have contributed to the contamination

   Once the contaminant and possible entrance routes have been identified, a team of facility employees should be appointed to review production to identify what practices (or lack thereof) caused the contamination. This should begin as soon as possible since the conclusions will have immediate impact on sanitation and decontamination procedures and the entire remediation strategy.

Definitions

Kill step – a cooking, fermentation, acid or alkali treatment, or pasteurization step in the food processing protocol that will eliminate pathogens.

References

Hoxie, N. J., et al. (December 1997), "Cryptosporidiosis-Associated Mortality Following a Massive Waterborne Outbreak in Milwaukee, Wisconsin", American Journal of Public Health 87 (12): 2032–2035, PMC 1381251

Scallan E, Hoekstra RM, Angulo FJ, Tauxe RV, Widdowson M-A, Roy SL, et al. Foodborne illness acquired in the United States—major pathogens. Emerg Infect Dis 2011 Jan [date cited]. http://dx.doi.org/10.3201/eid1701.P11101 DOI: 10.3201/eid1701.P11101

FDA Bad Bug Book. http://www.fda.gov/Food/FoodSafety/FoodborneIllness/

Micro-organisms in Foods 6. Microbial Ecology of Food Commodities. 2010. 2nd edition. International Commission on Microbiological Specifications for Food (ICMSF). Kluwer Academic/PlenumPublishers" Estimates of Foodborne Illness in the United States". Centers for Disease Control and Prevention (CDC). http://www.cdc.gov/foodborneburden/

Parasites and Foodborne Illness. 2011. USDA/FSIS fact sheet. http://www.fsis.usda.gov/Factsheets/Parasites_and_Foodborne_Illness/index.asp#7

Table1. Contaminant Identification

Organism	Common Food Vehicle	Reservoirs	Biocides (Sanitizers)*
Foodborne/Waterborne Gram negative pathogenic bacteria			
Salmonella	Animals, raw meats, poultry, seafood. Raw vegetables, nuts and spices Ready-to-Eat (RTE) items such as cream-filled desserts and toppings, spices, peanut butter, cocoa, and chocolate.	Livestock, poultry, and wildlife, soil, water, fecal matter, insects and other pests	Chlorine compounds and iodophors effective, but activity decreased by residual soils and very pH dependent. Chlorine dioxide very effective but worker safety an issue. Quaternary ammonium compounds (QAC), ozone, hydrogen peroxide, and peracetic acid also effective. Peracetic acid may also help remove biofilms.
Campylobacter	Livestock and poultry, wild and domestic animals, shellfish, water and unpasteurized milk	Livestock, poultry, and wildlife, sediments, manure holding ponds, and agricultural watersheds	See Above
Shiga Toxin producing E. coli (EHEC)	Livestock, raw or undercooked meats, seed, bean sprouts, lettuce, sausages, cheese and raw milk	Livestock, wildlife, soil, water, fecal matter, insects and other pests	See Above
Shigella	Raw vegetables	Water	See Above
Vibrio	Fish & shellfish	Water	See Above
Yersinia	Animals, meats and seafood	Water and soil	See Above

*Effectiveness of any sanitizer is dependent on the type of surface being sanitized, temperature, humidity, and pH.

Organism	Common Food Vehicle	Reservoirs	Biocides (Sanitizers)*
Foodborne/Waterborne Gram positive pathogenic bacteria			
Listeria monocytogenes	Milk, raw vegetables and ice cream RTE items as smoked fish, prepared salads, cheese, sprouts, cooked meat, poultry, and delicatessen meats.	Bird, mammals (including humans), soil, water, and feces	Quaternary ammonium compounds (QAC) are effective, less effected by residual soil than chlorine compounds and leave an antimicrobial film after use. Chlorine compounds, iodophors, ozone, hydrogen peroxide and peracetic acid are also used.
Staphylococcus aureus	Poultry, meat and egg products Delicatessen salads and sandwiches (egg, tuna, macaroni, etc.), cream filled bakery items (éclairs, cream pies, etc.) and dairy products.	Humans and animals (primary sources), dust, air, water, sewage, equipment and surfaces	See Above
Foodborne/Waterborne parasites			
Cryptosporidium, Cyclospora, Giardia and Toxoplasma (Entamoeba: *Common in tropical and sub-tropical regions)*	Produce; raspberries and other berries, lettuce, fresh herbs; unpasteurized fruit juices and milk. Toxoplasma may also contaminate the meat of livestock, mainly pork	Livestock, wildlife, and humans (except Toxoplasma), water and soil.	Resistant to bleach, peracetic acid, phenols, and QAC at commercially recommended concentrations. Also resistant to chlorinated water. Ozone and hydrogen peroxide are considered to be the most effective water disinfecting agents. Chlorine dioxide is also used. Liquid hydrogen peroxide (6.0 - 7.5%) is an effective surface sanitizer. Ozone and hydrogen peroxide are safe for use in foods according to 21 CFR 173. UV radiation may be used against Cryptosporidium in water supplies

*Effectiveness of any sanitizer is dependent on the type of surface being sanitized, temperature, humidity, and pH.

Organism	Common Food Vehicle	Reservoirs	Biocides (Sanitizers)*
Foodborne/Waterborne Sporeforming bacteria			
Bacillus cereus	Meats, milk, fish, vegetables, and rice RTE foods such as sauces, puddings, gravies, pasta, salads, soups, and casseroles	Soil, sediments, vegetation, insects and animals, and cereal grains	Quaternary ammonium compounds generally not effective against spores. Bleach and hydrogen peroxide, peracetic acid chlorine dioxide and ozone are effective against spores at high concentrations (EPA).
Clostridium perfringens	fish, poultry, soups, gravies, meat roasts, stews, and dried soups/gravy mixes	Humans, animals and insects soil, water sediments, compost, and decaying vegetation	See Above
Clostridium botulinum	Canned vegetables and meat products and seafood	soil and sediments	See Above
Foodborne/Waterborne viruses			
Norovirus	Fruits and vegetables contamination, RTE foods (preparation by an infected food handler) or shellfish contaminate through infected water)	Human	Hydrogen peroxide, ozone, bleach, chlorine dioxide, and some quaternary ammonium compounds are considered effective against Norovirus and Hepatitis. Higher concentrations of active compound (compared to bacteria) may be required.
Hepatitis A	Ice, water, fruits, vegetables, shellfish, and take-out foods	Human	See Above

*Effectiveness of any sanitizer is dependent on the type of surface being sanitized, temperature, humidity, and pH.

References and Acknowledgements

FDA Bad Bug Book. http://www.fda.gov/Food/FoodSafety/FoodborneIllness/

Contact Dr. Cosby at 919-733-7366 (mark.cosby@ncagr.gov) for more information

Disclaimer:
Funding for this project was made possible, in part, by the Food and Drug Administration through grant 1R18FD004286-01, views expressed in written materials or publications and by speakers and moderators do not necessarily reflect the official policies of the Department of Health and Human Services; nor does any mention of trade names, commercial practices, or organization imply endorsement by the United States Government.

DRAFT GUIDANCE

4

INNOVATIVE FOOD DEFENSE PROGRAM

The Sanitation Process, Ingredients, and Storage

Introduction

If a food processing plant and some or all of the refrigerated or frozen ready-to-eat (RTE) foods produced has been contaminated with microbial adulterants, careful steps must be taken to rid the plant of these adulterants and help prevent their recurrence. This document is provided in a series to address recommendations on controls to reduce the potential of contamination of RTE foods. The topics addressed include:

- Personnel
- The design, construction and operation of your plant
- The design, construction and maintenance of equipment, and
- Sanitation Controls

This specific document is provided to give recommendations regarding The Sanitation Process for the clean-up and control of microbial contamination in a RTE food plant. Potential sources of contamination in RTE foods can include but are not limited to:

Food Contact Surfaces

- Fibrous and porous-type conveyor belts
- Filling and packaging equipment
- Belts, peelers and collators
- Containers, bins, tubs, baskets
- Slicers, dicers, shredders and blenders
- Utensils
- Gloves

Non-contact Surfaces

- In-floor weighing equipment
- Cracked hoses
- Hollow rollers for conveyances
- Equipment framework
- Open bearings
- Motor housings
- Maintenance tools (screwdrivers, wrenches)
- On/Off switches
- Cleaning tools (brushes, brooms, scrapers)
- Condensate drip pans
- Forklifts, hand trucks, trolleys and racks
- Trash cans
- Pallets for ingredients and product

Utilities

- Compressed air systems including air filters
- Ice makers
- Refrigeration systems including freezers

Common Situations that have resulted in Contamination of RTE Foods

There are a number of scenarios that have been identified as having contributed to the microbial contamination of RTE Foods. These include but are not limited to the following:

- Used equipment is brought from storage and installed in the process line without through cleaning
- A new employee who is not properly trained is delegated to help clean process equipment
- Raw or under-processed food is brought into the area where cooked food is held
- Maintenance workers move from raw areas to packaging machines without changing clothes or properly washing their hands
- Heat exchangers become compromised (have pinhole leaks)
- Equipment parts, food bins, tubs, etc. are cleaned on the floor
- Improper use of footbaths
- Employees arrive for work in dirty clothes or boots and are not provided with a change

Who Should Follow The Guidance in this Document?

We would recommend that any processor of RTE foods would benefit by following the guidance provided by this document and other documents in this series. The guidance is especially formulated for those processors who have had products recalled or their facility closed due to microbially contaminated foods either by the FDA or the NCDA&CS. However, we believe that all RTE foods processors will benefit from following these recommendations to help avoid the product contamination/plant closure scenario.

How Does this Document Relate to the FDA GMPs and Other Regulations?

This document is not meant to provide any Guidance which contradicts FDA's GMPs. If one studies the GMPs, you find that binding requirements for the processing of food are given as shall while the non-binding recommendations are given as should. The guidance and recommendations in this document are meant to complement those of the GMPs. Other regulations must be followed such as milk products producers must follow the Grade A Pasteurized Milk Ordinance and shellfish products producers must follow the National Shellfish Sanitation Program Model Ordinance.

Understanding Your Ingredients, Process, Cleaners and Sanitizers and Finished RTE Product

One must understand their intended RTE food product thoroughly to determine the best ingredients, process, packaging and necessary cleaning and sanitation processes. This document especially addresses the needs of sanitizers and provides recommendations and guidance to help provide the framework for controlling microbial contamination of RTE foods.

The Sanitation Process for RTE Food Plants

General Considerations: We would recommend that you separate RTE food production areas from raw food areas. In general, the areas where RTE foods are prepared, processed and stored before they are finished RTE foods should be isolated as much as possible to reduce the potential for contamination of RTE foods via air, aerosols or traffic of employees, equipment and supplies. Equipment washing areas should be isolated. Cleaning with high pressure systems should only take place in such a manner that exposed food and food contact surfaces are not subject to overspray and aerosols. In addition to the isolation step, plans should be developed to assure that positive air pressure is maintained in the RTE areas. The positive pressure should be maintained with a HEPA filtered air supply.

Sections of the GMPs (21 CFR part 110) that must be considered in all decisions regarding sanitation for plants producing RTE foods include but may not be limited to the following:

110.35 (a), 110.35 (d) (1), 110.80 (b) (1), 110.80 (b) (7)

The following specific steps provide specific guidance for the areas and operations listed:

Design and Construction of Sanitary Equipment: We recommend you obtain and study Sanitary Equipment Design which is a companion document in this series to understand how to properly clean each piece of equipment equipment. We recommend you obtain and study the modules entitled cleaners and sanitizers which are companion documents in this series to fully understand how each impacts the sanitation process.

Equipment: We recommend you obtain and study Sanitary Equipment Design which is a companion document in this series.

Equipment for Transport: Carts, forklifts, mobile racks and pallets are known sources of potential contamination. Therefore, we recommend that you designate one set of such equipment to areas where RTE foods are prepared and processed (exposed). We recommend that you clean and sanitize the wheels of all transport devices before they enter areas where RTE foods are processed or exposed. We recommend that you use a mechanism such as color coding to distinguish between transport items used in RTE foods preparation and exposure areas and those where raw materials are handled or stored.

Water Systems: We recommend that water systems be properly designed, installed and maintained such that backflow and cross-connections between potable and non-potable water lines and systems are not allowed. We recommend that you have mixed hot and cold water at all hand washing stations. Also, that all water treatment systems be maintained and periodically inspected such that they do not become a source of microbial contamination.

Personnel: We recommend you obtain and study Personnel Sanitation which is a companion document in this series.

Sanitation: High pressure water hoses should not be used while RTE foods are exposed or after equipment has been sanitized for use. This helps prevent aerosols from contacting RTE foods, food contact surfaces, food packaging materials and personnel handling these foods. We recommend you obtain and study Sanitation and Cleaners and Sanitizers which are companion document in this series.

General Sanitation Program

We would recommend that a sanitation standard operating procedure (SSOP) and sanitation maintenance schedule be developed where RTE foods or food contact surfaces are processed or exposed. We recommend that these SSOPs for cleaning equipment and floors identify:

- Equipment or area to be cleaned
- Disassembly of equipment, if necessary
- Frequency of cleaning
- Type and concentration of cleaning materials and sanitizers
- Time/temperature of cleaning solutions
- Flow rate (velocity) or pressure if CIP used

We recommend that SSOPs for cleaning and sanitizing equipment include the following:

- Lock out/Tag out-designated personnel power down and secure equipment to prevent inadvertent start up
- Dry clean/ solids removal including packaging material
- Pre-rinse equipment to remove visible food soil (correct temperature)
- Apply cleaner (correct type, concentration, temperature)
- Scrub or circulate
- Rinse to remove cleaner and food residue
- Sanitize- apply heat or sanitizer (correct temperature, correct time, correct concentration
- Verify proper cleaning and sanitizing

We recommend that SSOPs for cleaning and sanitizing floors include:

- Removal of heavy soil or debris from floors
- Clean other debris including packaging material from floors
- Rinse floors with low pressure/low volume water at correct temperature
- Use a brush (colored coded) for floor use only or floor scrubber and cleaner to scrub floor
- Rinse floors with low pressure/low volume water
- Sanitize floors with appropriate chemical sanitizer
- Remove excess water if needed

We recommend for clean-in place (CIP) systems that the following be monitored:

- Concentration of cleaner solution and sanitizers
- Verify flow rate
- Time
- Temperature

We recommend for wet cleaning of equipment:

- Do not use this procedure in a room where RTE food is exposed, even if food is covered
- Remove all exposed RTE food before any wet cleaning of floors and equipment food
- Remove all exposed RTE food from cooler before cleaning cooler, refrigeration condenser units, or condensate drip pans and hoses

We recommend for CIP systems:

- Have separate systems for cleaning equipment used to process RTE food and that used to process raw food
- If you use a common system , maintain temperature alkaline cleaning solution at or above 71°C (160°F)
- Use separate COP system for used for cleaning processing equipment for RTE food and for equipment used for processing raw food

We recommend that you maintain and clean equipment used for cleaning to prevent it from becoming a source of contamination and use a color coding system for RTE and raw product cleaning. Sections of 21 CFR part 110 that are applicable to a general sanitation program include:

110.35(a), 110.35(d)(1), 110.80(b)(1), 110.80(b)(7).

We recommend for cleaning floor drains to prevent contamination of other surfaces :

- Do not clean floor drains when RTE foods are processed or exposed
- Do not use high pressure hoses to clear or clean a drain, since it could create aerosols and spread contamination
- Brushes used to clean floor drains may be at least ¼" (0.64 cm) smaller than the diameter of the drain opening to reduce aerosols from brushing

- Use a splashguard to prevent splashing during cleaning
- Utensils used for drain cleaning be dedicated to that purpose and easily identified (color coded)

We recommend when a drain backs up and water flows into an area where RTE foods are being processed:

- Stop production
- Remove any uncovered RTE foods from affected area
- Clear the drain
- Clean the affected area with an effective cleaner, rinse the drain, sanitize it and remove excess water
- Following drain cleaning employees should change clothes, wash and sanitize hands before any contact with RTE food contact surfaces
- If bactericidal drain rings are used, monitor and replace them when appropriate

Sections of 21 CFR part 110 that are applicable to cleaning drains include:

110.10(b)(1), 110.10(b)(3), 110.35(a), 110.37(b)(3)

Traffic Flow: To minimize the possibility of microbial contamination, we recommend that you control the traffic flow pattern for people, food products and equipment.

Prevention of Contamination of Ingredients and Proper Storage

Ingredients: Ingredients may be contaminated with disease causing microorganisms (pathogens) and it is recommended that the processor treat ingredients with a control measure such as heating (cooking) to control contamination. Alternatively, there are many EPA and FDA certified antimicrobial agents available that can be used as direct food contact sanitizers to treat raw agricultural products, raw poultry, beef and seafood (see Table 2 in the Sanitizers and Decontamination Module) If these control measures are not used, it is recommended that controls be established and implemented to reduce the potential for pathogens. These suggested controls include:

- Obtain ingredients using a supplier's Certificate of Conformance (COC) (guarantee)
- Obtain ingredients using a supplier's Certificate of Analysis (COA)
- Test ingredients or other raw materials for pathogen presence

If a COC is used, it is recommended that an annual on-site audit of the supplier be conducted and the processor periodically tests ingredients to verify absence of pathogens. If a COA is used, the sampling plan, analytical method, and limits of the method should be indicated. Results of the COA should be verified by testing on a periodic basis.

Sections of the GMPs (21 CFR part 110) that must be considered in all decisions regarding ingredients for plants producing RTE foods include but not limited to the following:

110.80, 110.80(2), and 110.80(b)(4)

Storage Practices

Microbial growth is very dependent on time and temperature since most pathogens normally have an optimum growth temperature of human body temperature (37°C, 98.6°F). It is estimated that under ideal conditions some bacteria can double in numbers in approximately 15-20 minutes. It is very important to control both of these conditions. It is also important to prevent cross-contamination by isolating raw and processed RTE foods. This involves separate storage areas for these products.

It is recommended that the processor implement procedures to minimize the time that ingredients and other raw materials, in-process materials, and finished foods are stored. We recommend that the processor establish and follow procedures to use a first-in first-out (FIFO) system.

It is recommended that the processor transport and store ingredients and other raw materials, in-process materials, and finished foods at an internal temperature of less than or equal to 4°C (40°F) and the processor establish and use control measures to achieve required temperature. Keep in mind, *Listeria monocytogenes*, a potent bacterial pathogen in RTE foods can grow at refrigerated temperatures.

It is recommended that during process, the processor establish and use controls on the amount of time that ingredients and other raw materials, in-process materials are held above 4°C (40°F).

Sections of the GMPs (21 CFR part 110) that must be considered in all decisions regarding storage for plants producing RTE foods include but not limited to the following:

110.40(c), 110.80(a)(5), 110.80(b)(2), 110.80(b)(3) and 110.80(b)(3)

Definitions

Adulterated food defined by FDA, if food bears or contains poisonous or deleterious (harmful) substance, contains filthy, putrid, decomposed substance or any substance that is unfit for human food. The food is prepared, packed, or held in a manner that may cause it to be contaminated or injurious to health.

Certificate of Analysis (COA) is a document that reports and certifies the test results of a product.

Certificate of Conformance (COC) is a document confirming that a product or service meets the required specifications, regulations or contractual agreements.

Clean in place (CIP) means a system to clean piping or equipment without disassembly, where interior product zones are fully exposed and soil can be washed away with a cleaning solution and then sanitized with a properly diluted sanitizer.

Clean out of place (COP) means a system used to clean parts and pieces after disassembly.

Critical food-contact surface means a surface that contacts food, or a surface from which drainage onto the food or onto surfaces that contact the food in the ordinary process when the food is not being subjected to an approved control process.

Critical non-food contact surface or area means a surface (other than food contact) that could, through action of man or equipment contaminate a food that will thereafter not be subjected to the approved control process.

Cross-contamination microorganisms or toxic chemicals are transferred to the food product from food handlers, raw food products or the environment.

Finished RF-RTE Food means a refrigerated or frozen RTE Food that has been processed by an approved process and is packaged.

Ready-to-Eat (RTE) Food means a food that is customarily consumed without cooking by the consumer or that appears to be suitable for use without cooking.

FDA refers to the **U.S. Food and Drug Administration.**

Good Manufacturing Practices (GMPs) refers to all practices used in the food facility to make sure food products are produced under safe and sanitary conditions and protected from adulteration. Code of Federal Regulations (CFR), Title 21, Part 110.

NCDA&CS refers to the **N.C. Department of Agriculture and Consumer Services.**

We recommend that you also familiarize yourself with the definitions found in 21 CFR 110.3 which you can access on FDA's internet website for Center for Food Safety and Applied Nutrition (CFSAN).

Sanitation refers to all precautions and measures which are necessary in the production, processing, storage and distribution in order to assure an unobjectionable, sound and palatable product which is fit for human consumption.

Sanitation Training refers to a comprehensive training program including the fundamentals of cleaning and sanitation to provide a high degree of safety for consumers, employees, and the environment.

SSOP refers to sanitation standard operating procedure, defines a procedure for cleaning and sanitizing equipment or areas in a food processing facility.

References and Acknowledgments

Substantial portions of this document were suggested or directly obtained from FDA Draft Guidance Document: Control of Listeria monocytogenes in Refrigerated or Frozen Ready-to-Eat Foods. Feb. 2008.

Basic Elements of Equipment Cleaning and Sanitizing in Food Processing and Handling Operations. R.H. Schmidt. Univ. of Florida IFAS Extension FS14; 1997, revised 2009, Reviewed 2012

Food Equipment Cleaning and Sanitizing: Water Chemistry and Quality, Sanitizer Properties. Arizona Department of Health Services, Food Safety and Environmental Services. 2012

Making The Right Choice-The Sanitation Process. R.Bakka, Editor. Ecolab Inc. 1997

Notes

Notes

Notes

Innovative Food Defense Project

Contact Dr. Cosby at 919-733-7366 (mark.cosby@ncagr.gov) for more information

Disclaimer:
Funding for this project was made possible, in part, by the Food and Drug Administration through grant 1R18FD004286-01, views expressed in written materials or publications and by speakers and moderators do not necessarily reflect the official policies of the Department of Health and Human Services; nor does any mention of trade names, commercial practices, or organization imply endorsement by the United States Government.

DRAFT GUIDANCE

5

INNOVATIVE FOOD DEFENSE PROGRAM

Sanitary Personnel Practices for RTE Food Plants

Introduction

If a food processing plant and some or all of the refrigerated or frozen ready-to-eat (RTE) foods produced has been contaminated with microbial adulterants, careful steps must be taken to rid the plant of these adulterants and help prevent their recurrence. This document is provided in a series to address recommendations on controls to reduce the potential of contamination of RTE foods. The topics addressed include:

- Personnel
- The design, construction and operation of your plant
- The design, construction and maintenance of equipment, and
- Sanitation Controls

This specific document is provided to give recommendations regarding personnel practices and specifically addresses guidelines to help prevent contamination by microbial organisms. Potential sources of contamination in RTE Foods can include but are not limited to:

Food Contact Surfaces

- Fibrous and porous-type conveyor belts
- Utensils
- Gloves

Non-Contact Surfaces

- Employee clothing
- Cracked hoses
- Maintenance tools (screwdrivers, wrenches)
- On/Off switches
- Control panels
- Cleaning tools (brushes, brooms, scrapers)
- Forklifts, hand trucks, trolleys and racks
- Trash cans
- Pallets for ingredients and product

Utilities

- Ice makers
- Refrigeration systems including freezers
- Employees are often common denominators

Common Situations that have resulted in Contamination of RTE Foods

There are a number of scenarios that have been identified as having contributed to the microbial contamination of RTE foods. These include but are not limited to the following:

- Used equipment is brought from storage and installed in the process line without through cleaning
- A new employee who is not properly trained is delegated to help clean process equipment
- Raw or under-processed food is brought into the area where cooked food is held
- Maintenance workers move from raw areas to packaging machines without changing clothes or properly washing their hands
- Equipment parts, food bins, tubs, etc. are cleaned on the floor
- Improper use of footbaths
- Employees arrive for work in dirty clothes or boots and are not provided with a change

Who Should Follow The Guidance in this Document?

We would recommend that any processor of RTE foods would benefit by following the guidance provided by this document and other documents in this series. The guidance is especially formulated for those processors who have had products recalled or their facility closed due to microbially contaminated foods either by the FDA or the NCDA&CS. However, we believe that all RTE foods processors will benefit from following these recommendations to help avoid the product contamination/plant closure scenario.

How Does this Document Relate to the FDA GMPs and Other Regulations?

This document is not meant to provide any Guidance which contradicts FDA's GMPs. If one studies the GMPs, you find that binding requirements for the processing of food are given as shall while the non-binding recommendations are given as should. The guidance and recommendations in this document are meant to compliment those of the GMPs. Other regulations must be followed such as milk products producers must follow the Grade A Pasteurized Milk Ordinance and shellfish products producers must follow the National Shellfish Sanitation Program Model Ordinance.

Understanding Your Ingredients, Process, Personnel and Finished RTE Products

One must understand their intended RTE food product thoroughly to determine the best ingredients, process and packaging and how your employees contribute to each. This document especially addresses personnel issues and provides recommendations and guidance to help provide the framework for control of microbial contamination of RTE Foods.

Sanitation for Personnel and Contractors

General Considerations: We would recommend that you separate and segregate employees from RTE food production areas from those that work in raw food areas. In general, the areas where RTE foods are prepared, processed, and packed before shipment should be isolated as much as possible to reduce the potential for contamination of RTE foods via air, aerosols or traffic of employees and their personal gear.

Sections of the GMPs (21 CFR part 110) that must be considered in all decisions regarding plants producing RTE Foods include but may not be limited to the following:

110.10 (a)	110.10 (b) (1)
110.10 (b) (3)	110.10 (b) (5)
110.0 (b) (9)	110.10 (c)
110.37 (f)	

The following specific steps provide specific guidance for the areas and operations listed:

Cross contamination Prevention:

- Production areas are considered critical control points or Primary Pathogen Control Areas (PPCA). Movement in and out of these areas should be limited to authorized personnel. In addition, a buffer area or vestibule should be established where protective clothing is donned (put on) and hands are washed and sanitized.
- Employees in raw ingredients areas are prohibited from entering production areas
- Employees who handle food should not be allowed to pick up items from the floor
- We recommend that employees in production area who handle trash, floor sweepings, and waste pick up these items as necessary.
- All brooms, squeegees, dust pans and other cleaning items should be color coded and dedicated to a specific area of the facility. For example, blue brooms are dedicated to the production area and used there exclusively whereas red brooms are only used in raw ingredient area.
- Normal maintenance tools, step stools, ladders, and trash bins should be color coded and dedicated to a specific work area
- Forklifts, hand trucks, pallet jacks and other wheeled equipment used in raw ingredient or dock areas should not be allowed in production areas

Clothing: We recommend the following:

- Employees not wear street clothes in areas where RTE foods are prepared or exposed unless the street clothes are adequately covered above the knees with a clean smock or coat.
- Provided smocks and coats should not be worn outside the production area except in an adjacent vestibule where they are donned such as the hand wash area.
- Smocks and coats are never worn in bathrooms.
- Smocks or uniforms for RTE food preparation areas should be color coded such that they are easily distinguishable from others. Production and sanitation functions should be color coordinated to prevent any confusion between employees. Further, employees working with raw materials should have different color garments than those with finished RTE Foods.
- Contact of food with bare hands is not allowed. All employees who come in

contact with food must wear gloves and replace them as necessary.

- If employee(s) arrive with dirty clothes and shoes/boots (i.e arriving from a farm with manure showing), the employee should be or be given access to a shower and a complete change of clothing or sent home to change.

Health and Hygienic Practices: Training the work force is vital is reduce the risk of product contamination. The concept of critical control points and primary pathogen control areas (PPCA) must be explained so workers truly understand these concepts. A clear understanding of these concepts will increase employee compliance to the sanitary SOP. All employees, outside contractors and seasonal or temporary workers must receive this training. A bi-annual or annual update and review should be held for all employees.

Worker Illness: We recommend that any employee or contractor suffering from gastroenteritis, the flu or colds be excluded from working in food production areas. Further, any open cuts or sores must be adequately covered before entry to the production area.

Hair and Beard Nets: We recommend that all employees wear hair and beard nets for any facial hair, including moustaches. Employees wearing hard hats should wear hair nets underneath the hat as hair is exposed. Personal baseball and snap-back type caps worn outside the facility should not be worn in the production area.

Arm and Chest Hair: We would recommend that any excessive arm or chest hair be covered either by a coat or other device such as arm guards (disposable sleeves).

Jewelry and Personal Effects: Rings, ear rings, necklaces, false fingernails and nail polish cannot be worn in the production area and pens or other items cannot be carried in the breast pocket of shirts, male or female. This applies to employees, contractors and regulatory officials. A good rule of thumb is; no jewelry or other items above the waist. Note that some facilities may restrict the use of perfume. Ties should not be worn into RTE areas even when partially covered by a smock or jacket.

Hands, Hand washing and Gloves: Hand washing may be the most critical link to reducing the risk of RTE-food contamination. Norovirus and Hepatitis A are common organisms transferred to food by food handlers. Any employee or contractor who enters an area where RTE foods are prepared or exposed should thoroughly wash their hands and dry them according to sanitary SOP established by the facility. Hand sanitizer should be used after washing. NOTE: hand sanitizers do not replace thorough hand washing. Hands free sinks and hands free soap and towel dispensers should be installed at all hand wash stations.

We recommend the use of suitable utensils (tongs, spatulas) or gloves when touching RTE foods, food contact surfaces and packaging materials. In other words, bare hands should never perform such tasks! In regard to glove use, we recommend that:

- Employees wash and sanitize their hands before putting gloves on.
- Rubber or plastic work gloves be washed and sanitized before use.
- Single use gloves be discarded and replaced after an employee touches a non-food contact surface or material.
- Gloves worn outside areas where RTE foods are prepared or exposed be discarded before returning to the food production area. Proper hand washing sanitary SOP must be followed each time a person enters the production area
- Hand sanitizers do not take the place of proper hand washing

Reusable gloves have proven hard to clean and sanitize properly to avoid microbial contamination. We recommend their use only when handling meat items with bones or other items that tend to puncture gloves with less thickness. If reusable gloves are found desirable, we recommend that a very detailed procedure be developed to assure that cleaning and sanitation really occurs after each use. Employees should be reminded that careful hand washing and sanitation is still a precursor to reusable glove use.

We recommend that employees be taught and that supervisors monitor practices that lead to glove puncture and subsequent failure. Some of these include long and poorly maintained fingernails, rings, false fingernails, wrist jewelry including watches and careless handling of equipment.

Environmental conditions will also influence glove wear. For example, hot working conditions will cause the hands to sweat in the gloves which can actually loosen bacteria from the skin and under fingernails. Also, employees are more likely to wipe exposed areas of their skin with the back of their gloved hands introducing contamination.

Employees should wash hands and change gloves more frequently under these conditions. Proper glove use should be taught and periodically reviewed. Employees should understand that as soon as they detect a failure in a glove, the glove should be discarded properly, the hands washed and sanitized and a replacement put on each hand. The high prevalence of biological contaminants such as Norovirus necessitate the proper use of gloves even in RTE food plants that have traditionally been considered low risk types of foods.

Gloves should be changed as often as needed in an RTE facility. This should at least include changes at every break, at least every two hours or when gloves are punctured or contaminated.

Boots: We recommend that employees and contractors who enter areas where RTE foods are prepared or exposed should wear footwear that is only worn in that area. Further, it should be made of an impenetrable material that is in good repair and can be easily cleaned and sanitized. We recommend footbaths with sanitizer when entering areas where RTE foods are prepared or exposed. They must be checked frequently to assure proper sanitizer levels. In dry areas, we do not recommend wet footbaths and believe that dry powdered sanitizer may be more appropriate.

Maintenance Employees: All maintenance employees and contractors should follow the same requirements of sanitary SOP for production employees.

Sanitation: We recommend you obtain and study Sanitation and Cleaners and Sanitizers which are companion document in this series.

Traffic Flow: To minimize the possibility of microbial contamination, we recommend that you control the traffic flow pattern for people, food products and equipment.

Floor Cleaning and Maintenance: The floors in all wet areas must be kept reasonably clean and free of debris. They also must be periodically cleaned at least during every break. This will help minimize slips and falls even with non-skid soles on the boots of employees.

Definitions

Critical Control Point – steps in the production process that are most important in reducing the risk of contamination

Critical food-contact surface means a surface that contacts food, or a surface from which drainage onto the food or onto surfaces that contact the food in the ordinary process when the food is not being subjected to an approved control process.

Critical non-food contact surface or area means a surface (other than food contact) that could, through action of man or equipment contaminate a food that will thereafter not be subjected to the approved control process.

Donned – To put clothing on

PPCA – Primary Pathogen Control Area; area where the presence of a pathogen presents the highest risk of food contamination, such as production and packaging areas.

We recommend that you also familiarize yourself with the definitions found in 21 CFR 110.3 which you can access on FDA's internet website for Center for Food Safety and Applied Nutrition (CFSAN).

References and Acknowledgements

Substantial portions of this document were suggested or directly obtained from FDA Draft Guidance Document: Control of Listeria monocytogenes in Refrigerated or Frozen Ready-to-Eat Foods. Feb. 2008

Green, L.R., et al. 2007. Factors Related to Food Worker Hand Hygiene Practices. J Food Protect. 70(3):661-666.

Innovative Food Defense Project

Contact Dr. Cosby at 919-733-7366 (mark.cosby@ncagr.gov) for more information

Disclaimer:
Funding for this project was made possible, in part, by the Food and Drug Administration through grant 1R18FD004286-01, views expressed in written materials or publications and by speakers and moderators do not necessarily reflect the official policies of the Department of Health and Human Services; nor does any mention of trade names, commercial practices, or organization imply endorsement by the United States Government.

DRAFT GUIDANCE

6

INNOVATIVE FOOD DEFENSE PROGRAM

Cleaners for RTE Food Plants

Introduction

Once a contamination event in refrigerated or frozen ready-to-eat (RTE) product has been identified, the source of that contamination must be identified. If the contaminant is traced to the facility, careful steps must be taken to rid the plant of these adulterants and help prevent their recurrence. These documents are provided as recommendations for activities and controls to recover from and reduce the potential for recurrent contamination of RTE foods. The topics addressed include:

- Personnel
- The design, construction and operation of your plant
- The design, construction and maintenance of equipment
- Sanitation Controls

This specific document is provided to give suggestions for cleaning in response to microbial contamination of a RTE food plant. Refer to the definitions at the end of this document for clarification of the terms involved.

Potential sources of contamination in RTE foods can include but are not limited to:

Food Contact Surfaces

- Fibrous and porous-type conveyor belts
- Filling and packaging equipment
- Work Tables
- Belts, peelers and collators
- Containers, bins, tubs, baskets
- Slicers, dicers, shredders and blenders
- Utensils
- Gloves

Non-contact Surfaces

- Floors and walls
- Sinks, faucets, and water fountains
- In-floor weighing equipment
- Air and water hoses
- Hollow rollers for conveyances
- Equipment framework
- Open bearings
- Motor housings on equipment
- Maintenance tools (screwdrivers, wrenches)
- On/Off switches
- Equipment control panels
- Cleaning tools (brushes, brooms, scrapers)
- Condensate drip pans
- Forklifts, hand trucks, trolleys and racks
- Trash cans
- Pallets for ingredients and product

Utilities

- Electrical cords and plugs
- Water hoses and nozzles
- Compressed air systems including air filters
- Ice makers
- Refrigeration systems including freezers
- Fans and other air handling equipment

Common Situations that have resulted in Contamination of RTE Foods

There are a number of scenarios that have been identified as having contributed to the microbial contamination of RTE foods. These include but are not limited to the following:

- Used equipment is brought from storage and installed in the process line without thorough cleaning
- A new employee who is not properly trained is delegated to help clean process equipment
- Raw or under-processed food is brought into the area where cooked food is held
- Maintenance workers move from raw areas to finished product areas without changing clothes or properly washing their hands
- Water from a roof leak in a warehouse area contaminates the packaging of product constituents which are handled by process personnel in production area
- Heat exchangers become compromised (have pinhole leaks)

- Equipment parts, food bins, tubs, etc. are cleaned on the floor
- Improper use of footbaths
- Employees arrive for work in contaminated clothes or boots and are not provided with a change
- Standing water on floor

Who Should Follow The Guidance in this Document?

Any processor of RTE foods would benefit by following the guidance provided by this document and other documents in this series. The guidance is especially formulated for those processors who have had products recalled or their facility closed due to microbially contaminated foods either by the FDA or the NCDA&CS. However, we believe that all RTE foods processors will benefit from following these recommendations to help recover from or avoid the product contamination/plant closure scenario.

How Does this Document Relate to the FDA GMPs and Other Regulations?

This document is not meant to provide any Guidance which contradicts FDA's GMPs. If one studies the GMPs, you find that binding requirements for the processing of food are given as shall while the non-binding recommendations are given as should. The guidance and recommendations in this document are meant to compliment those of the GMPs. Other regulations must be followed such as milk products producers must follow the Grade A Pasteurized Milk Ordinance and shellfish products producers must follow the National Shellfish Sanitation Program Model Ordinance.

Understanding Your Ingredients, Process, Cleaners, and Finished RTE Product; Cleaners and Sanitizers

One must understand their intended RTE food product thoroughly to determine the best ingredients, processes, packaging and cleaning and sanitation processes. In addition, when dealing with or recovering from a contamination incident it is important to select the proper cleaning, sanitizing, and decontamination agents and procedures. This document especially addresses the needs of cleaners and provides recommendations and guidance to help provide the framework for controlling microbial contamination of RTE foods and food processing facilities.

Cleaners for RTE Food Plants

General Considerations: We would recommend that you separate RTE food production areas from raw food areas. In general, the areas where RTE foods are prepared, processed and stored before they are finished RTE foods should be isolated as much as possible to reduce the potential for contamination via air, aerosols, employee traffic, equipment and supplies. Equipment washing areas should be isolated. Cleaning with high pressure systems should only take place in such a manner that exposed food and food contact surfaces are not subject to overspray and aerosols. In addition to the isolation step, plans should be developed to assure that positive air pressure is maintained in the RTE production areas. The positive pressure should be maintained with a High Efficiency Particle Attenuation (HEPA) filtered air supply.

Sections of the GMPs (21 CFR part 110) that must be considered in all decisions regarding sanitation for plants producing RTE foods include but not limited to the following:

110.35(a),110.35(d)(1), 110.80(b)(1), and 110.80(b)(7)

Cleaning

The process which removes soils that may support the growth of microorganisms or inhibit the sanitizing of a surface. The surface must be thoroughly cleaned and rinsed before it can be sanitized or decontaminated. Cleaning can be accomplished by manual (bucket and brush) or mechanical processes.

Employee safety is of utmost importance in preparing and using cleaners. The cleaner should always be added to the water (not vice versa) in preparation to prevent reaction and splashing of the mixture. Employees should be provided with personal protective equipment (PPE) including a face shield, gloves, and protective aprons or impervious coveralls and protective footwear when preparing and using cleaning solutions. Employees should familiarize themselves with the Material Safety Data Sheets (MSDS) for all chemicals. This is basic information related to cleaners and safety requirements for chemical use including storage and preparation. MSDS must be maintained on file and available to all employees.

Factors that Affect Cleaning

- Is the surface to be cleaned easily accessible; under or inside the equipment; in a closed system or pipe line?

- Is it a vertical part of the equipment where foams or gels are required to remain in contact.
- Is it overhead?

Functions of Cleaners

Cleaning agents are designed to assist the cleaning process with the following procedures:

- Defloculation or dispersion – breaks up particles and suspends them in solution
- Dissolves and solubilizes the soil
- Emulsification breaks up fats and suspends them in the cleaning solution
- Penetration is entering the soil through pores
- Peptization- breaks up proteins to form colloids
- Saponification - forms soaps from fats
- Suspension keeps insoluble particles in solution and prevents accumulation on surfaces
- Rinsability breaks surface tension and allows drainage
- Wetting increases contact with soil, reduces surface tension, increases emulsification
- Synergists- increase total detergency

Cleaning Compounds are composed of the following materials:

- Alkali – emulsify and saponify fats and oils and peptize proteins
- Phosphates – emulsify, peptize, disperse, soften water and prevent accumulation on surfaces
- Surfactants – wet and disperse soils, allow water and the cleaning compound to penetrate the soil for removal from the surface
- Chelating agents – soften water and control mineral deposits, displaces soil and prevents accumulation on surfaces.
- Acids – prevent and remove mineral deposits, they also will remove the "stone" which is a combination of denatured proteins and minerals
- Enzymes--used to break down larger soil units to smaller units, examples include: lipases (fats or oils), amylases (starches), and proteases (protein). These materials are temperature sensitive and the maximum temperature for their use should be 120°F.
- Chlorinated Alkali remove protein soils

Cleaning Methods

- Wet Cleaning
  - Manual
  - Automatic (e.g., automated rack and pan washers)
  - Soaking
  - Spraying
  - Clean-in-place (CIP)
  - Clean-out-of-place (COP)
  - Foaming
  - Gelling
  - Abrasive cleaning
- Dry cleaning

Types of Soils

Visible food soil classes include fats, proteins, carbohydrates and mineral salts. Invisible soils include microorganisms (bacteria, yeasts, molds, viruses).

Fats or Oil Soils

Fats or oils exist in food products as an emulsion and are not water soluble. They can be removed by raising the temperature using hot water and changing the fat to a liquid, this can cause problems by solidifying in the drains. Alkaline detergents with ingredients to break up the fat (emulsify) or change it to a soap (saponify) can be used for more demanding fat/oil residues.

Protein Soils

Protein soils may present special problems in cleaning if they have been denatured by heating or by being exposed to an acid environment. The proteins may also combine with mineral salts following heating to result in a stone formation. The cleaning procedures for removing protein soil include alkaline or acid cleaners, an oxidizing material, or an enzyme. Protein soils that are not denatured can be removed by a water rinse. Strong alkali can be used to remove denatured proteins and can also be combined with an oxidizing agent such as chlorine. These are known as chlorinated alkaline cleaners. Acid cleaners are effective in removing denatured protein and mineral combinations described as "stone". Enzymes are organic materials which break down (hydrolyzes) proteins to smaller particles. Enzymes are proteins and function in a narrow pH and temperature range.

Carbohydrate Soils

Carbohydrates (sugars) normally do not present a problem in cleaning and can be removed with water and an alkaline cleaner.

Starch when heated gelatinizes and forms a gel, which can more effectively be removed with an acid cleaner. The enzyme amylase can break down starch to more simple materials for easier cleaning. The same restrictions apply to enzyme break down of proteins.

Mineral Salts Soils

Mineral salts present problems with interference in the cleaning and may decrease the effectiveness of cleaners. The mineral salts may originate from water or the food soil. Calcium, magnesium, iron and manganese are some common minerals that cause salt films. They may combine with protein to form "stone" and can be removed by acid cleaners (organic acids). The mineral salts from the water can be bound (sequestered) to prevent the forming of film on equipment surfaces. Polyphosphates, Chelating agents, and gluconates bind these salts making them more solube and thus the cleaner more effective.

Potential Problem: Biofilms

- Composed of a collection of bacteria attached to surfaces and excreted extracellular polysaccharide or slime layer
- Biofilms protect cells from adverse environmental conditions and can be a source of intermittent contamination in the facility
- Bacteria within biofilm may be up to 1,000X more resistant to some sanitizers than cells not in biofilm

Method of cleaning and cleaner application

Manual cleaning can be used for small areas or equipment that is disassembled. A cleaning solution and brush work well in cleaning areas with a minimum amount of protein residue. It is recommended to have separate brushes for raw (unprocessed) food equipment and finished ready to eat product equipment.

The contact time for the cleaner can be increased by the use of foams and gels. They work well in cleaning vertical surfaces and the concentration can be stronger than in a manual cleaner. The main types of mechanical cleaning methods include spray washers, clean-out of place (COP) and Clean in Place (CIP). Automatic spray washers are similar to a car wash and materials move through on a conveyor system. A COP washer is a parts washer where equipment is disassembled and placed in a vat where cleaning solution is circulated. A CIP system circulates a rinse, wash, rinse and sanitizing cycle through pipes and equipment.

- Nature of soil and amount present

  The soil to be removed is composed of the food product residue and the possible minerals from the water and cleaner mixture. Food products are composed of fats or oils, carbohydrates (simple- sugars) and complex (starches and fiber – cellulose); proteins, and minerals. It is important to consider the effect of very hot water in the rinse step on proteins.

- Choice of Cleaners

  The choice of cleaners is determined by the food soil present and the ability to prevent it from accumulating on the surface being cleaned. Sugars and minerals (salts) are soluble in water and can be removed by the rinse step. Fats and oils are not soluble in water (consider oil floating on a puddle). They can be solubilized by the use of an alkali (base) cleaner to form soap. Proteins can be removed by a chlorinated alkaline cleaner. Other soils include lubricating grease and oils.

  Surface properties are also a primary concern in the choice of cleaners. Stainless steel is generally preferred for surfaces and plastics (i.e., HDPE) can be used on conveyor belts and other moving parts. Aluminum is subject to corrosion by both acids and alkalis and steel is subject to rust. Plastic and rubber are subject to cracking making them ideal surfaces for biofilm formation. Wood surfaces should be avoided except for cutting boards and tables. Any surface will corrode with exposure to harsh chemicals over time which can cause abrasions and pitting on surfaces. This reduces cleaning (and sanitizing) effectiveness and may dictate replacement of the surface.

Cleaning effectiveness

Factors that affect cleaning effectiveness include:

- Water Hardness and Treatment

  Water hardness is the most important chemical property of water since it will influence cleaner effectiveness. It can impact the ability of a cleaning agent to effectively mix in solution or

may result in an objectionable residual on cleaned surfaces. There are two types of water hardness, temporary and permanent. Both types will result in a precipitation of minerals from the water resulting in decreased cleaner effectiveness and a deposit of scale on the surface cleaned. Temporary hardness is due to calcium or magnesium bicarbonate and will precipitate by both heating and alkali (base). Permanent hardness is caused by calcium or magnesium chlorides or sulfates. Heating will not precipitate the salts, but alkali (base) will cause a precipitate. Several cleaners are alkali based and the cleaner effectiveness can be reduced. The hardness may leave a scale or film. Water softener systems may reduce or eliminate the problems related to this factor.

- Cleaner Concentration
  Normally higher concentrations increase effectiveness, however cleaners are expensive and employees should have sanitary SOP (Standard Operating Procedures) for the preparation and use of cleaners.

- Temperature of Cleaning Solution and Surfaces
  In normal practice cleaning rates would increase as the temperature increases. However, the temperature is restricted to 150°F for safety issues especially if the cleaning method is manual.

  The time that the cleaner remains in contact with the soil to be removed is also important, longer contact time normally results in better or more complete cleaning.

- Velocity or Force and Contact Time
  The amount of force or energy applied is another factor; the greater force will result in greater amounts of soil removal.

Environmental Impact

The discharge of waste materials from cleaning can impact the waste discharge from the facility. This discharge may be required to be pretreated prior to discharge to a municipal treatment facility. It is important to control such factors as pH (acid or alkaline), biological solids, and grease content. Sanitizer composition may also be restricted since it may have a negative impact on the useful microorganisms involved in waste water treatment. Some publically owned treatment facilities limit pH discharges from processors to a pH range of 5-8.5. The processor may change the cleaner or adjust the pH of waste water before discharge. The phosphate content may also be restricted due to potential increase in algae growth in surface waters.

High pressure water hoses should not be used while RTE foods are present or after equipment has been sanitized for use. This helps prevent aerosols from contacting RTE foods, food contact surfaces, food packaging materials and personnel handling these foods.

Dry Cleaning Methods (absence or low amounts of water)

- Dry Steam (approximately 5% moisture)
- Dry ice blasting
- Vacuuming

One dry cleaning alternative is superheated saturated "dry" steam at 265°F at an adjustable pressure of 0 to 150 psi that is created at temperatures far above the boiling point of water. Superheated vapor combines the solvent power of water with high-temperature cleaning capability. The system will kill salmonella, *E. coli*, botulism and listeria contaminants. Dry steam can be used on scales and sensors, conveyors, wrappers, slicers and dicers, feeders, gaskets, electrical panels, refrigeration systems and more. System benefits include, among others, reduced need for cleaning chemicals. To date, bakeries have been among the most avid users of the system, followed closely by meat and poultry processing plants and confectionery processors.

Dry ice-blasting is a form of abrasive blasting, where dry ice, the solid form of carbon dioxide, is accelerated in a pressurized air stream and directed at a surface in order to clean. It can be used to clean food processing equipment to effectively decontaminate surfaces of Salmonella enteritidis, E. coli, and Listeria monocytogenes such that these microorganisms are not detectable using conventional microbiological methods. It may also be used to clean some equipment without disassembly and without producing fire or electrical hazards.

Vacuuming is an effective dry cleaning method for food manufacturers who process low moisture materials such as flour, cinnamon and sugar. Certified explosion-proof or dust ignition-proof and industrial HEPA vacuums are recommended

as part of OSHA Standards and Sanitation Standard Operating Procedures. Vacuuming is an economical option for cleaning pipes, vents, tops of machinery, and floors. Collected materials can be readily and easily disposed.

General Cleaning Program

We would recommend that a sanitary SOP (sSOP) and sanitation maintenance schedule be developed where RTE foods or food contact surfaces are processed or exposed. We recommend that these sSOPs for cleaning and sanitizing equipment and floors identify:

- Equipment or area to be cleaned
- Disassembly of equipment, if necessary
- Frequency of cleaning and sanitizing
- Type and concentration of cleaning materials and sanitizers
- Time/temperature of cleaning solutions
- Flow rate (velocity) or pressure if CIP used

- sSOPs for cleaning and sanitizing equipment include the following:
    - Lock out/Tag out-designated personnel power down and secure equipment to prevent inadvertent start up
    - Dry clean/solids removal including packaging material
    - Pre-rinse equipment to remove visible food and other soils
    - Apply cleaner (correct type, concentration, temperature)
    - Scrub or circulate
    - Rinse to remove cleaner and food residue
    - Sanitize apply heat or sanitizer (correct temperature, correct time, correct concentration
    - Verify proper cleaning and sanitizing

- sSOPs for cleaning and sanitizing floors should include :
    - Removal of heavy soil and debris from floors
    - Clean other debris including packaging material from floors
    - Rinse floors with low pressure/low volume water at correct temperature
    - Use a brush (colored coded) for floor use only or floor scrubber and cleaner to scrub floor
    - Rinse floors with low pressure/low volume water
    - Sanitize floors with appropriate chemical sanitizer
    - Rinse and remove excess water if needed

We recommend for clean-in place (CIP) systems that the following be monitored:

- Concentration of cleaner solution and sanitizers
- Verify flow rate
- Time
- Temperature
- maintain temperature of alkaline cleaning solutions at or above 71°C (160°F)

Wet cleaning of equipment, floors and other areas:

- Remove all RTE food before any wet cleaning of floors and equipment in the area
- Remove all RTE food from cooler before cleaning coolers , refrigeration condenser units, or condensate drip pans and hoses

We recommend for COP systems:

- Raw materials equipment should be cleaned separately from finished product equipment if possible. Make sure that all cleaning tanks, brushes, and other equipment are sanitized before use.

Sections of 21 CFR part 110 that are applicable to a general sanitation program include
21 CFR 110.35, and 110.80(b)

Floor Drains

Drains can be a continuing source of contamination of other surfaces and require special attention. Therefore, care should be taken for floor drain cleaning; we recommend:

- Do not clean floor drains when RTE foods are being processed or stored in the area
- Do not use high pressure hoses to clear or clean a drain, since it could create aerosols and spread contamination
- Brushes used to clean floor drains may be at least ¼ (0.64 cm) smaller than the diameter of the drain opening to reduce aerosols from brushing
- Use a splashguard to prevent splashing during cleaning
- Utensils used for drain cleaning be dedicated to that purpose and easily identified (color coded)

We recommend when a drain backs up and water flows into an area where RTE foods are being processed:

- Stop production
- Remove RTE foods from affected area
- Clear the drain
- Clean the affected area with an effective

cleaner, rinse the drain, sanitize it and remove excess water
- Following drain cleaning, employees should change clothes, wash and sanitize hands before any contact with RTE food contact surfaces
- If bactericidal drain rings are used, monitor and replace them when appropriate

Sections of 21 CFR part 110 that are applicable to cleaning drains include
21 CFR 110.10(b)(1), 110.10(b)(3), 110.35(a), and 110.37(b)(3)

- Fundamentals of Cleaning

General Steps in the Cleaning and Sanitizing or Decontamination of Food Processing Facilities:

1. LOCK OUT/TAG OUT - This step involves maintenance or designated personnel powering down the equipment that is to be cleaned/sanitized. They then secure it in such a way that it cannot be powered up while being cleaned and cause injury to the cleaning/sanitizing crew. Some equipment may have parts that need to run during the process to ensure proper cleaning and sanitizing. Personnel must be properly trained on such operations to ensure safety.

2. DRY CLEAN UP or SOLIDS REMOVAL - This step involves removing all solids including packaging material and food scraps in, on, and around the equipment so proper cleaning and sanitizing can occur.

3. CLEANING - There are three sub-steps within cleaning:
Pre-rinse - To wet down surfaces.
Wash - Detergent solution would be applied at the appropriate concentration and allowed to set for the appropriate amount of time.
Rinse - Remove the detergent and soil residue. It is important for the food soil to remain suspended in the cleanser solution.

4. SANITIZING - In this step sanitizer would be applied at the correct concentration and allowed to set for the appropriate amount of time.

5. DECONTAMINATION – In the event of contamination involving known microbial adulterants, a specific decontamination agent selected from the antimicrobial agents approved for the specific application by the Environmental Protection Agency will be used in accordance with the manufacturer's instruction to assure the destruction or neutralization of the adulterant. Once an approved decontamination agent has been applied, additional cleaning cycle may be required to remove any residue of the agent. A list of potential microbial adulterants and associated EPA recommended decontaminates and a list of EPA recognized sterilants are provided in the accompanying DVD.

6. RINSE - This step may or may not be necessary, it depends on the type of sanitizer used and directions given for use.

7. VERIFICATION - cleaning and sanitizing must be verified by the approved sanitary SOP adopted by the facility. This verification must be sanctioned by local, state and federal officials before production if cleaning and decontamination is in response to a contamination event.

8. REMOVE LOCK OUT/TAG OUT - Once everything is dry and ready to power up, maintenance or designated personnel removes security features and powers up the equipment/machinery.

The following specific steps provide specific guidance for the areas and operations listed:

Design and Construction of Sanitary Equipment: We recommend you obtain and study Sanitary Equipment Design which is a companion document in this series.

Equipment: We recommend you obtain and study Sanitary Equipment Design which is a companion document in this series.

Equipment for Transport: Carts, forklifts, mobile racks, pallet and pallet jacks are known sources of potential contamination. Therefore, we recommend that you dedicate one set of such equipment to areas where RTE foods are prepared and processed. We recommend that you clean and sanitize the wheels of all transport devices before they enter areas where RTE foods are processed or exposed. Color coding should be used to identify transport items dedicated to RTE food preparation and exposure areas from those where raw materials are handled or stored. Specific written cleaning and sanitizing procedures should be prepared for any equipment that must be moved into the RTE processing areas. This includes a record of each time the movement is required and who carried out the procedure.

Water Systems: Water systems should be properly designed, installed and maintained such that backflow and cross-connections between potable and non-potable water lines and systems are not allowed. Hot and cold water must be present at all hand washing stations. Hands free sinks, and hands free

soap and towel dispensers should be used at every hand wash station. Also, all water treatment systems must be maintained and periodically inspected such that they do not become a source of microbial contamination. Special consideration should be given to waste water systems that serve both the raw material and the finished goods processing areas to assure that cross contamination does not occur.

Personnel: We recommend you obtain and study Personnel Sanitation which is a companion document in this series.

Sanitation: High pressure water hoses should not be used while RTE foods are exposed or after equipment has been sanitized for use. This helps prevent aerosols from contacting RTE foods, food contact surfaces, food packaging materials and personnel handling these foods. We recommend you obtain and study Sanitation and Cleaners and Sanitizers which are companion document in this series.

Definitions

Alkali or Alkaline Cleaners means cleaners with a pH above 7.0

Acid Cleaners means cleaners with a pH below 7.0

Chlorinated Alkaline Cleaners means an alkaline cleaner with the addition of a chloramines (should this be chlorine?) for an aid in protein removal

Cleaning means removing soils, dirt, or other material that may support the growth of microorganisms or inhibit the sanitizing of a surface.

Clean in place (CIP) means a system to clean piping or equipment without disassembly, where interior product zones are fully exposed and soil can be washed away with a cleaning solution and then sanitized with a properly diluted sanitizer.

Clean out of place (COP) means a system used to clean parts and pieces after disassembly.

Critical food-contact surface means a surface that contacts food, or a surface from which drainage onto the food or onto surfaces that contact the food in the ordinary process when the food is not being subjected to an approved control process.

Critical non-food contact surface or area means a surface (other than food contact) that could, through action of man or equipment contaminate a food that will thereafter not be subjected to the approved control process, such air conditioning vents that might drip condensate during high temperature water or steam cleaning activities.

Disinfect means the elimination of microorganisms (excluding spores) from contaminated environments, equipment, and surfaces

Ready-to-Eat (RTE) Food means a food that is customarily consumed without cooking by the consumer or that appears to be suitable for use without cooking.

Sanitize is the reduction of microorganisms to levels that public health authorities considered safe

Sterilize is the complete removal of all microorganisms including spores.

Water Conditioners materials added to cleaners to treat minerals in the water used for cleaning.

We recommend that you also familiarize yourself with the definitions found in 21 CFR 110.3 which you can access on FDA's internet website for Center for Food Safety and Applied Nutrition (CFSAN).

References and Acknowledgements

Making the Right Choice – Cleaners. R. Bakka Ed. Ecolab Inc. 1997 Innovative Food Defense Project

Contact Dr. Cosby at 919-733-7366 (mark.cosby@ncagr.gov) for more information

Disclaimer:
Funding for this project was made possible, in part, by the Food and Drug Administration through grant 1R18FD004286-01, views expressed in written materials or publications and by speakers and moderators do not necessarily reflect the official policies of the Department of Health and Human Services; nor does any mention of trade names, commercial practices, or organization imply endorsement by the United States Government.

DRAFT GUIDANCE

7

INNOVATIVE FOOD DEFENSE PROGRAM

Sanitizers and Decontamination for RTE Food Plants

Introduction

If a food processing plant and some or all of the refrigerated or frozen ready-to-eat (RTE) foods produced has been contaminated with microbial adulterants, careful steps must be taken to rid the plant of these adulterants and help prevent their recurrence. This document is provided in a series to address recommendations on controls to reduce the potential of contamination of RTE foods. The topics addressed include:

- Personnel
- The design, construction and operation of your plant
- The design, construction and maintenance of equipment, and
- Sanitation Controls

This specific document is provided to give recommendations regarding sanitizers in the clean up and control of microbial contamination in a RTE food plant.

Potential sources of contamination in RTE foods can include but are not limited to:

Food Contact Surfaces

- Fibrous and porous-type conveyor belts
- Filling and packaging equipment
- Work Tables
- Belts, peelers and collators
- Containers, bins, tubs, baskets
- Slicers, dicers, shredders and blenders
- Utensils
- Gloves

Non-contact Surfaces

- In-floor weighing equipment
- Air and water hoses
- Hollow rollers for conveyances
- Equipment framework
- Open bearings
- Motor housings
- Maintenance tools (screwdrivers, wrenches)
- On/Off switches
- Equipment control Panels
- Cleaning tools (brushes, brooms, scrapers)
- Condensate drip pans
- Forklifts, hand trucks, trolleys and racks
- Trash cans
- Pallets for ingredients and product

Utilities

- Compressed air systems including air filters
- Ice makers
- Refrigeration systems including freezers

Common Situations that have resulted in Contamination of RTE Foods

There are a number of scenarios that have been identified as having contributed to the microbial contamination of RTE foods. These include but are not limited to the following:

- Used equipment is brought from storage and installed in the process line without through cleaning
- A new employee who is not properly trained is delegated to help clean process equipment
- Raw or under-processed food is brought into the area where cooked food is held
- Maintenance workers move from raw areas to packaging machines without changing clothes or properly washing their hands
- Heat exchangers become compromised (have pinhole leaks)
- Equipment parts, food bins, tubs, etc. are cleaned on the floor
- Improper use of footbaths
- Employees arrive for work in dirty clothes or boots and are not provided with a change

Who Should Follow The Guidance in this Document?

We would recommend that any processor of RTE foods would benefit by following the guidance provided by this document and other documents

in this series. The guidance is especially formulated for those processors who have had products recalled or their facility closed due to microbially contaminated foods either by the FDA or the NCDA&CS. However, we believe that all RTE Foods processors will benefit from following these recommendations to help avoid the product contamination/plant closure scenario.

How Does this Document Relate to the FDA GMPs and Other Regulations?

This document is not meant to provide any Guidance which contradicts FDA's GMPs. If one studies the GMPs, you find that binding requirements for the processing of food are given as shall while the non-binding recommendations are given as should. The guidance and recommendations in this document are meant to complement those of the GMPs. Other regulations must be followed such as milk products producers must follow the Grade A Pasteurized Milk Ordinance and shellfish products producers must follow the National Shellfish Sanitation Program Model Ordinance.

Understanding Your Ingredients, Process, Cleaners and Sanitizers and Finished RTE Product

One must understand their intended RTE food product thoroughly to determine the best ingredients, process, packaging and necessary cleaning and sanitation processes. This document especially addresses the needs of sanitizers and disinfectants and provides recommendations and guidance to help provide the framework for controlling microbial contamination of RTE foods.

Sanitizers for RTE Food Plants

General Considerations. We would recommend that you separate RTE food production areas from raw food areas. In general, the areas where RTE foods are prepared processed and stored before they are finished RTE foods should be isolated as much as possible to reduce the potential for contamination of RTE foods via air, aerosols or traffic of employees, equipment and supplies. Equipment washing areas should be isolated. Cleaning with high pressure systems should only take place in such a manner that exposed food and food contact surfaces are not subject to overspray and aerosols.

Desirable Properties of a Sanitizer

- Broad spectrum activity against vegetative cells and spore formers, yeast, molds and viruses
- Resistance to organic matter, detergent and soap residues, water hardness and pH variations
- Non-toxic and non-irritating
- Water soluble
- Acceptable odor or no odor
- Stable in concentrate and use dilution
- Easy to use
- Readily available
- Inexpensive
- Easily measured in use solution

Sections of the 21 CFR Part 110 and Section 178 must be considered in all decisions regarding sanitation for plants producing RTE foods. These include but may not be limited to the following:

Sanitizing

Reducing and destroying disease and spoilage organisms on a surface to an acceptable level

Methods of Sanitizing

- Heat, hot water and steam
- Ultraviolet light and other irradiation
- Chemical

Heat Sanitizing

- Flowing steam to 200°F for 5 min
- Hot water at 170°F for 2 min on equipment, 5 mins. when pumped
- Hot air is much less effective because it is dry heat.

Advantages of Heat Sanitizing

- Relatively easy to measure
- No residues
- Good penetration of joints and crevices
- Dries quickly
- Broad spectrum kill of microorganisms

Disadvantages of Heat Sanitizing

- Makes area hot
- Could cause burns
- Equipment must be cooled before use
- Increases water use (however, water can be reused in rinsing or cleaning solutions)
- May cause parts of moving equipment to bind

Chemical Sanitizers

Most chemical sanitizers are combined with potable water. Standards set by U.S. Public Health Department indicate potable water has less than 1 Colony Forming Unit (CFU) per 100 per 100 ml. The U.S. Food and Drug Administration (FDA) is primarily involved in evaluating residues

- Approved under 21 CFR 178.1010
- Also regulated under FIFRA (Federal Insecticide Fungicide and Rodenticide Act)
- Must be used according to label directions
- May be proprietary compounds

Advantages of Chemical Sanitizers

- Use less energy
- Not very temperature dependent
- Can be compounded to special needs
- Some have residual effect

Disadvantages of Chemical Sanitizers

- Potential for residues
- Spills can be a problem
- Loss of potency on storage
- Require monitoring kits
- Have limited effectiveness against certain organisms

Types of Chemical Sanitizers

- Hypochlorite (Sodium or Calcium) Dilute chlorine bleach is a common sanitizer for equipment and surfaces in food processing facilities. The effective compounds in a chlorine solution are hypochlorite and hypochlorous acid. It is effective in killing most microorganisms (spores and parasites such as Cryptosporidium are resistant) and is relatively inexpensive. Bleach solutions are most effective at a pH of 6.5 to 7.5 and concentrations must be no greater than 200 parts per million for no rinse uses (21CFR178). Lower amounts of HOCL are produced as the pH increases and consequently the efficiency decreases. It is very important to thoroughly rinse equipment following cleaning with an alkaline cleaner if chlorine is used as a sanitizer, especially if the pH is below 4.0.

  Disadvantages of chlorine bleach are that it can be corrosive on certain surfaces and quickly loses its killing power in the presence of food soils, oil, or other organic material. Effective cleaning is absolutely required if bleach is used for sanitation. There is some concern that chlorine may react with materials in water and produce trihalomethane compounds.

- Inorganic/Organic chlorine compounds Similar to hypochlorites, inorganic and organic chlorine compounds (i.e., chloramines, halamines) are effective against bacteria, fungi and viruses; not affected by hard water, effective at fairly low temperatures; relatively inexpensive and do not foam. Chloramines are replacing chlorine for water and wastewater treatment since they are less likely to produce trihalomethane compounds, are less reactive with organic matter, are less affected by pH than chlorine and do not affect the taste of water. They are more stable than chlorine solutions. The disadvantages of chloramines are that they are slow acting compared to chlorine and require a long contact time. Chloramine T is the common name for commercial applications of chloramines and is available in tablet form to be mixed in water and applied to surfaces. Halamines are similar to chloramines but may be used as antimicrobial coatings of surfaces.

- Iodophors are sanitizers composed of an acid and a surfactant carrier. The advantages include being one of the most effective sanitizers especially against molds and yeasts. There are approved as no-rinse food contact up to 25 ppm. They are less toxic, have a broader pH range, less corrosive when used below 120°F, and loose less of their effectiveness when compared to chlorine. It is a good sanitizer for hand sanitizing and foot or boot baths. Disadvantages are causing staining and equipment discoloration, may be affected by water hardness. Low temperatures result in loss of efficacy and their use is restricted to a maximum of 120°F. Iodine will vaporize and is very corrosive at this temperature. It is not normally used as a CIP sanitizer for this reason plus it will foam. More expensive than chlorine. Applicators are available so that the sanitizer can be dispensed as a mist in processing facilities.

- QUATS These are quaternary ammonium compounds or QACs. The maximum concentration that is allowed by FDA for a no-rinse food contact sanitizer is 200 ppm but concentrations can be higher for floors, drains and walls. The advantages are non-toxic, odorless, colorless, non – corrosive, stable to heat, and relatively stable to organic soils. They are effective over a fairly wide pH range. QACs also have surfactant or wetting agent properties similar to detergents and can aid in emulsifying organic compounds. They are less effective against gram negative organisms (i.e., *E. coli*, Salmonella)

but more effective against *Listeria monocytogenes* than chlorine. Their effectiveness is reduced by some cleansers so a rigorous rinse cycle is required after cleaning. They can also be used in misting (aerosol) applications.

- Acid anionic sanitizers These compounds are made of organic or inorganic acids (i.e., phosphoric, formic, or acetic acids) plus a surfactant, so they have similar emulsifying properties as QACs. They are effective against a broad range of bacteria (but not mold), nontoxic, and non-corrosive. They must be used at low pH (2-3) and are not suitable for CIP application.

- Peracetic acid sanitizers (PAA) These sanitizers are composed of acetic acid and hydrogen peroxide and will form peracetic acid in water. It is a strong oxidizer, considered stronger than chlorine and chlorine dioxide. It is effective against bacteria, fungi, viruses, spores and can be used against parasites such as Cryptosporidium. It has some cleaning properties and can be helpful in removing biofilms. It is more stable than hydrogen peroxide and has greater effectiveness in the presence of soils. It is safe for use on stainless steel but may corrode aluminum and plastics. It breaks down to nontoxic compounds of acetic acid and water so has little environmental impact as a waste product. It can be used in gaseous form but the treated area must be totally enclosed. Gaseous PAA has been approved by the EPA for treatment of anthrax spores. A disadvantage is that it produces a strong odor which can irritate the eyes and mucous membranes and can be very caustic on exposed skin. Therefore, proper PPE must be used during its application.

- Hydrogen Peroxide (liquid and gas) Hydrogen peroxide is effective against bacteria and fungi and can be effective against spores and parasites such as Cryptosporidium and Giardia at high concentrations. Hydrogen peroxide is more effective in its gaseous form and in this form may break down protein toxins such as Staphylococcal enterotoxin and prions, the causative agent of Mad Cow Disease. It is nontoxic at low concentrations but can be caustic at concentrations above 35%. The gaseous form is often used as a fumigant in enclosed areas but may cause irritation to the mouth and nose, thus respiratory PPE may be required during its application. It is compatible with almost all surfaces and the gaseous form is often recommended for sensitive electronic equipment. It is not as stable as PAA and can rapidly degrade on contact with wood and some metals.

- Chlorine Dioxide (liquid and gas) Chlorine dioxide is often used to treat drinking water, wastewater and production rinse water in the produce industry. It is also used as a surface disinfectant. It is a stronger oxidizer than other chlorine sanitizers, is effective over a wide pH range and is less affected by organic matter. Chlorine dioxide is more expensive than other chlorine types and must be produced by a generator on site. Generators are commercially available. Chlorine dioxide gas is used as a sanitizer for medical facilities, laboratories, and pharmaceutical clean rooms and is becoming more popular in the food industry. It is highly toxic so it can only be used in tightly enclosed areas, but has a short treatment time and equipment is available to treat any by products. It is effective against bacteria, fungi, viruses, parasites, and very effective against spores at higher concentrations. It is often used for remediation (i.e., decontamination of the Hart Senate Office building during the 2001 anthrax attacks). EPA has performed studies with chlorine dioxide and approved the liquid form for treating hard surfaces and the gas for fumigating enclosed facilities.

- Ionizing Radiation (Irradiation) Irradiation is commonly used (and has FDA and USDA approvals) in the food industry on fruits and vegetables, meat and poultry products, water and air to reduce contaminating microorganisms. Microorganisms are destroyed in a matter of seconds. In fact, spices and flour are routinely treated with irradiation to kill microorganisms. High frequency ultraviolet (UV) light, gamma ray and X-ray irradiation have enough energy to break chemical bonds and remove electrons from molecules which causes the breakdown of microorganisms. E-beam (electron beam) radiation is produced by a linear accelerator and generates electrons to eliminate microorganisms. The energy from these sources are high

enough to destroy microorganisms but too low to induce radioactivity in any material. Irradiation of fruits and vegetables can extend shelf life of the product by reducing the number of spoilage organisms. Pre packed or bulk foods to be sterilized are placed on conveyor belts and carried into irradiation chambers which are shielded to prevent the radiation from escaping the chamber. Packaging materials, equipment and some tools can also be sanitized by irradiation when placed on a conveyor belt and run through the irradiation chamber. The use of radiation is limited due to high cost, specific safety requirements and waste disposal. It also has limited penetration ability. Irradiation can also harm certain plastics so dosage must be tightly controlled.

- **Ozone** Ozone sanitizing can be a single-step process. Ozone, or O_3, is a strong oxidizing form of oxygen. It is a strong disinfectant and deodorizer that is second only to fluorine in oxidizing power and is reportedly up to 50 percent stronger than chlorine as an oxidizer and it acts 3,000 times more rapidly, without the toxic risk of chlorine. It was approved for use in water by the FDA in 2001. Ozone and ozonated water is used in the seafood industry as a disinfectant for air and water and has been approved for direct contact with food. It is used to disinfect fruit and vegetables and has been approved by USDA for use in meats and poultry. It is effective against bacteria and viruses but fungi and spores are resistant. Currently ozonated water shows promise as an equipment and surface disinfectant. No waste is involved since ozone will break down to oxygen and it is certified by the National Organic Program for use on organic foods. The primary use of ozone to date has been for conveyor and equipment cleaning, wastewater treatment and odor oxidation, with growing application in air systems in locker and rest rooms. A disadvantage is on site equipment is required to generate the ozone which may be cost prohibitive. The efficacy of ozone gas is also limited by relative humidity in the area and rapidly loses its effectiveness below 70% humidity.

- **Organic acids** Examples of acid disinfectants are acetic, citric, and propionic acids They are non-toxic at concentrations for use but concentrated solutions can be caustic (i.e., acetic acid). Their usefulness is due in large part to the low pH of working solutions. Their effectiveness against microorganisms varies depending on the type so the operator needs to make sure the acid chosen meets their specific needs. For example, citric acid is recommended for use on some viruses (i. e., Foot and Mouth disease, FMD) and USDA has found that 2% citric acid is effective against FMD on wood surfaces. Acetic acid (5% glacial acetic acid) has widespread use and is applied as a mist or by spraying. It is also used as a COP sanitizer.

- **Electrolyzed water** Electrolyzed water is a relatively new technology that is a powerful sanitizer for drinking water and waste water, and surface disinfectant applications in the dental, medical and food industries. It is made by passing salted tap water through a charged electrolytic cell which produces a reduced high pH solution (which is an effective cleaner and biofilm remover) and an oxidized low pH solution. The low pH solution is collected and used as the sanitizer and contains hypochlorous acid, ozone and other oxidizing agents. It is effective against bacteria, viruses, fungi, and spores and is currently being used in the poultry, meat, produce and beverage industries. It is non-toxic (although it can be an irritant due to the low pH) and safely disposed of after use with little environmental considerations. It is considered to meet EPA regulations since the main agent is hypochlorous acid. Check with the equipment supplier for details. Electrolyzed water solutions are only stable for a day so an on site generator is required and several are commercially available. Initial investment in the generator may be high but many think the cost savings over time more than make up for the initial investment. Electrolyzed water can be corrosive to some surfaces and soils will reduce its efficacy.

- **Alcohol Pads** are primarily used in the food processing facilities for sanitization to meet HACCP and food safety requirements. Soft absorbent, non-woven pads saturated with 70% isopropyl alcohol may be used in the food processing facilities for sanitation to meet HACCP and food safety. Individually wrapped alcohol wipes are also ideal

for cleaning and sanitizing thermometer probes to prevent cross-contamination. Isopropyl alcohol may a useful disinfectant in facilities that require routine dry or low water cleaning.

- Fumigation is used to treat processing plants, boxcars, and ships. It is one of the quickest and most effective ways to eliminate pests from processed food and commodities. As a gas, a fumigant consists of separate molecules that are much smaller than the droplets of a fog or mist. Fumigants can penetrate very small spaces where pests live, such as those in flour. Fumigants can even penetrate seemingly solid items like brick, concrete, and wood. Advantages of fumigants include effective, fast-acting, total pest eradication, no residues, and penetration into hard to reach areas. Disadvantages include toxicity, highly trained licensed applicators may be required, area must be tightly confined, and expense. Some residues may be hard to remove from fumigated materials. Methyl bromide, formaldehyde, and ethylene oxide are three gases that have received crisis exemption status from EPA to fumigate office spaces, mobile homes and other enclosed places and mail, in response to a suspected anthrax contamination. These compounds are now rarely used or used only in specific niche areas (i. e., medical equipment requiring cold sterilization) because of their toxicity and cancer risks. Chlorine dioxide, vaporized hydrogen peroxide, peracetic acid and ozone are quickly becoming the fumigants of choice in an increasing amount of food processing situations. These sterilants have been used in the medical and pharmaceutical fields for many years and the equipment and application procedures are beginning to become more cost effective for food processing facilities. The initial equipment purchase or rental, plus technical services may be expensive but should be considered as part of the remediation response to a contamination event; and an investment in future sanitary innovations for the facility. The application of these sterilants is quick and can be used in CIP situations. Vaporized hydrogen peroxide and ozone are considered environmentally friendly since the by-products are water and oxygen and peracetic acid is classified as GRAS. All three, along with chlorine dioxide gas have also been approved for anthrax decontamination by the EPA.

Hypochlorites
- Inexpensive
- Broad spectrum kill
- Sensitive to pH
- Less effective in presence of organic materials
- May cause allergic reactions

Organic Chlorine Compounds
- Not as sensitive as hypochlorites to pH
- Require a longer exposure time
- Broad spectrum of destruction
- Commonly known as Chloramine T

Iodine Compounds
- Usually used with non-ionic compound as a wetting agent and referred to as an iodophor
- Color is proportional in intensity to concentration
- Non-irritating to skin
- Not affected by hard water

Quaternary Ammonium Compounds (QUATs or QACs)
- Stable
- Can form bacteriostatic films
- Residues can be negative or positive
- Not effective against spores and viruses
- Expensive
- Foam on mechanical application

Acid-Anionic Surfactants
- Effective only at acid pH
- Slow activity against spore formers
- Foam is a problem in mechanical or CIP applications
- Bacteria can become acid-adapted

Hydrogen Peroxide (HP) H_2O_2
- Used widely in medical field, limited use in food industry
- FDA approval for sterilization of equipment and packaging for aseptic operations
- Broad spectrum sanitizer
- Slightly higher activity against gram negative than gram positive organisms
- Eye and skin irritant at high concentrations (5% and above)
- Safety precautions and personal protective equipment should be used

Ozone (O_3)
- Widely used since early 1990's for the disinfection of water

- Since 1997 approved for use in U.S. food processing (GRAS), Generally Recognized as Safe
- Current use in wine industry , fresh- cut produce industry, produce storage facilities, food processing, bottled water and beverage industries
- Produced by interaction with oxygen (O_2) and electricity to produce (O_3)
- Unstable gas and will breakdown to oxygen after oxidizing organic matter (microorganisms)
- Broad spectrum sanitizer and effective against biofilms
- Must be generated on demand and cannot be stored
- Expense of ozone generating equipment and employee safety
- Toxic gas, Occupational Health and Safety Administration (OSHA) established eight –hour continuous maximum exposure limit of 0.1ppm and short term (15 min.) exposure of 0.3ppm
- Equipment cost and monitoring (safety) issues have prevented wide use in smaller facilities

FDA Approval

The U.S. Food and Drug Administration is primarily involved in evaluating residues from sanitizer use that enter the food supply, Any antimicrobial agent and its maximum usage level for direct use on food or food contact surfaces must be approved by FDA. Approved no-rinse food contact sanitizers and non product contact sanitizers, formulations and usage levels are listed in CFR 178.1010.

Hazard Communication Program

- Hazardous chemical inventory – name, storage area
- Chemical labeling procedures – name, manufacturer's name, address, potential hazards
- Material Safety Data Sheets (MSDS)
- Employee training
- Written plan (Hazard Communication Standard)

Hazardous Materials

- Chemical – potential health hazard or may cause injury
- OSHA requires HCS
- Right-to-know (HAZCOM) – inform employees of chemical hazards & provide training
- Material Safety Data Sheets (MSDS)- OSHA requirement

MSDS

- Safe use and handling information
- Physical, health, fire and reactivity hazards
- Precautions
- Appropriate personal protective equipment (PPE) when using chemical
- First-aid information and emergency procedures
- Manufacturer's name, address and phone number
- Preparation date of MSDS
- Hazardous ingredients and identity information
- Kept in accessible location\ Employees right-to-know

Registration of Chemical Sanitizers

- Sanitizers are subject to registration under the Federal Insecticide, Fungicide, and Rodenticide Act (FIFRA) administered by the U.S. Environmental Protection Agency (EPA). Application of a sanitizer not recommended for a specific use can be authorized during an emergency situation according to Section 18 of FIFRA.
- You should use sanitizing solutions with the conditions of use authorized under FIFRA, which should be on the product label.
- Contact the manufacturer or supplier of the sanitizer for specific recommendations regarding factors which may influence efficacy (temperature, pH, water hardness).

Sanitation Monitoring and Verification

Sanitation verification is part of the overall remediation strategy and therefore a detailed plan should be designed and in place before cleaning and sanitation begins (see the Decontamination Analysis and Verification module in this series). Verification of the sanitation process should also be part of the normal sanitary SOP. In addition, sanitation fluids must be monitored to ensure the proper concentration is always used. There are a variety of test strips available in the marketplace to measure concentrations of sanitizers.

Sections of 21 CFR 110 Applicable to Sanitation Monitoring

110.35(a) 110.35(a), 110.35(b), 110.35(d), 110.35(d)(1), 110.35(d)(2), 110.35(d)(5), and 110.80(b)(1).

The following specific steps provide specific guidance for the areas and operations listed:

Design and Construction of Sanitary Equipment: We recommend you obtain and study Sanitary Equipment Design which is a companion

document in this series.

Equipment: We recommend you obtain and study Sanitary Equipment Design which is a companion document in this series.

Equipment for Transport: Carts, forklifts, mobile racks and pallets are known sources of potential contamination. Therefore, we recommend that you designate one set of such equipment to areas where RTE foods are prepared and processed (exposed). We recommend that you clean and sanitize the wheels of all transport devices before they enter areas where RTE foods are processed or exposed. We recommend that you use a mechanism such as color coding to distinguish between transport items used in RTE foods preparation and exposure areas and those where raw materials are handled or stored.

Water Systems: Water systems should be properly designed, installed and maintained such that backflow and cross-connections between potable and non-potable water lines and systems are not allowed. Hot and cold water must be present at all hand washing stations. Hands free sinks and hands free soap and towel dispensers should be used at every hand wash station. Also, all water treatment systems must be maintained and periodically inspected such that they do not become a source of microbial contamination.
High pressure water hoses should not be used while RTE foods are present or after equipment has been sanitized for use. This helps prevent aerosols from contacting RTE foods, food contact surfaces, food packaging materials and personnel handling these foods.

Personnel: We recommend you obtain and study Personnel Sanitation which is a companion document in this series.

Decontamination in Response to an Intentional Bioterror Attack

In situations where known or suspected food adulteration has occurred intentionally, the decontamination required is much more complex than routine cleaning and sanitation. The procedures are similar but must be better documented, according to law enforcement regulations. The requirements can be more demanding and the number of agencies involved greater. Local, state and federal law enforcement official's involvement will be necessary. Besides the financial and incident management issues involved, the following issues also will need to be addressed:

The specific type of adulterant involved will determine:

- The hazards to which response personnel may be exposed
- The need for medical and environmental monitoring required
- The containment areas needed
- The decontamination agent and process required
- The personal protective equipment required
- The disposal method to be used
- The analytical testing required
- The parameters for determining when the facility is suitably cleaned and decontaminated to return to production.
- How returned product, raw materials, in process materials, plant equipment, and facilities will be addressed
- The size and scope of the cleaning and decontamination effort required
- Potential problems that might be encountered

Clearance goals are the objectives of what exactly is expected during the remediation process and what is the expected result after completion of the process.

Medical professionals, hygiene specialists, and environmental engineers may be required to participate in the planning, execution, and evaluation of the response.

A Public Relations team may be required to gather all pertinent information of the remediation process and release this information to employees, the media, and the public as necessary. Coordination with regulatory and law enforcement officials on information to be released and when will be required. It is critical that only one individual be assigned the task of spokesperson to ensure complete, non-contradictory and consistent communication to the outside world. The communication team along with owners, managers, supervisors, regulatory and law enforcement officials will contribute to any reports required but the reporting should be assigned to one individual.

Removal of equipment and personnel traffic and safety will also require more precise planning. Safe, transition, warm, hot and exclusion contaminant zones may need to be defined, clearly marked, and strenuously enforced. Depending on the virulence of the contaminant, individual staff may be required to monitor all response personnel, their fitness to respond and vital signs,

their donning of personal protective equipment, their entry and exit times, their work assignment, their partner, their decontamination procedure followed, their accomplishments and problems, their recovery time, their condition following their entry, and their departure from the site.

Another individual may be needed to do the same level of monitoring and documentation for response supplies, equipment, and waste materials. The same type of monitoring and documentation will be required for the specific materials, equipment, raw materials, and product being decontaminated.

All of this information must be available to the individual in charge of the response in a clear format and timely manner. Many aspects of this documentation are specified by applicable standards and regulation. Decisions made before, during, and following the response will be based on the best and most current information available from this type of documentation. It is important to remember that finances drive an event response, but the priorities must be human health and safety, animal health and safety, protection of the environment, and business continuity.

In significant contamination events the coordination of functions of event characterization, response logistics, medical and environmental monitoring, safety, operations, sample analysis, classification, waste handling and disposal must be closely coordinated.

In a major event special hazardous material response and disposal contractors usually prove to be worth the cost. This is because of they do this regularly, are familiar with the regulations, and they have access to the equipment, personnel, supplies and services required to make an efficient response possible. By using response organizations or consultants with whom the regulatory agencies are familiar the clean-up and return to production may be expedited. These organizations need to be managed by a process knowledgeable company representative and provided with clear specifications as to what the activity objectives and performance parameters will be. Every contamination event is different, but the approach to resolve them should be the same.

A list of potential microbial adulterants and associated EPA recommended decontaminants and a list of EPA recognized sterilants are provided in the accompanying CD.

Definitions

Clean in place (CIP) means a system to clean piping or equipment without disassembly, where interior product zones are fully exposed and soil can be washed away with a cleaning solution and then sanitized with a properly diluted sanitizer.

Clean out of place (COP) means a system used to clean parts and pieces after disassembly.

Critical food-contact surface means a surface that contacts food, or a surface from which drainage onto the food or onto surfaces that contact the food in the ordinary process when the food is not being subjected to an approved control process.

Critical non-food contact surface or area means a surface (other than food contact) that could, through action of man or equipment contaminate a food that will thereafter not be subjected to the approved control process.

Disinfect means the elimination of microorganisms (excluding spores) from contaminated environments, equipment, and surfaces

FIFRA (Federal Insecticide, Fungicide, and Rodenticide Act) sanitizers are subject to registration, administered by U.S. Environmental Protection Agency

Finished RTE Food means a refrigerated or frozen RTE Food that has been processed by an approved process and is packaged.

Ready-to-Eat (RTE) Food means a food that is customarily consumed without cooking by the consumer or that appears to be suitable for use without cooking.

FDA refers to the U.S. Food and Drug Administration.

NCDA&CS refers to the N.C. Department of Agriculture and Consumer Services.

Ozone (O_3) means an oxidizer (sanitizer) produced by the reaction of oxygen and electricity

OSHA means Occupational Health and Safety Administration

Sanitizer refers to a substance that reduces microbial contamination on inanimate surfaces to levels that are considered safe from a public health stand point.

We recommend that you also familiarize yourself with the definitions found in 21 CFR 110.3 which you can access on FDA's internet website for Center for Food Safety and Applied Nutrition (CFSAN).

References and Acknowledgements

Substantial portions of this document were suggested or directly obtained from FDA Draft Guidance Document: Control of Listeria monocytogenes in Refrigerated or Frozen Ready-to-Eat Foods. Feb. 2008

7 CFR 205.605 Nonagricultural (nonorganic) substances allowed as ingredients in or on processed products labeled as ''organic'' or ''made with organic (specified ingredients or food group(s)).''
http://www.gpo.gov/fdsys/pkg/CFR-2011-title7-vol3/pdf/CFR-2011-title7-vol3-sec205-605.pdf

21 CFR Part 173. Secondary Direct Food Additives Permitted in Food for Human Consumption.
http://www.accessdata.fda.gov/scripts/cdrh/cfdocs/cfcfr/CFRSearch.cfm?CFRPart=173

21 CFR Part 184. Direct Food Substances Affirmed as Generally Recognized as Safe.
http://www.accessdata.fda.gov/scripts/cdrh/cfdocs/cfcfr/CFRSearch.cfm?CFRPart=184

40 CFR 180.940 - Tolerance exemptions for active and inert ingredients for use in antimicrobial formulations (Food-contact surface sanitizing solutions).
http://www.gpo.gov/fdsys/pkg/CFR-2010-title40-vol23/pdf/CFR-2010-title40-vol23-sec180-940.pdf

Bradley, R.L. and Bohner, H.F. 1992. Properties of Chemical Sanitizers. Wisconsin Center for Dairy Research.

Boufford, T. 1998. Making the Right Choice- Sanitizers. Ed. Ecolab Inc.

Compatibility of Material and Electronic Equipment with Hydrogen Peroxide and Chlorine Dioxide Fumigation. Assessment and Evaluation Report. EPA/600/R-10/169. December 2010. Office of Research and Development National Homeland Security Research Center. www.epa.gov/ord.

Food Equipment Cleaning and Sanitizing: Water Chemistry and Quality, Sanitizer Properties. 2012. Arizona Department of Health Services.
http://www.azdhs.gov/phs/oeh/fses/fecs_wcq.htm

Food Related Fumigation – Classification 8 Training Manual. MP450-PD-8-05N. Donald R. Johnson, editor. University of Arkansas Cooperative Extension Service Printing Services.
http://plantboard.arkansas.gov/PlantIndustry/Documents/MP450Class8FoodRelatedFumigation.pdf

Giambrone, C. J. 2011. Safety and Sanitation. Multiply your Meat and Poultry Attack. Food Quality 18(5) October/November. Pg 29-35. Wiley-Blackwell.

Giambrone, C.J. 2011. Contamination Control Chlorine Clean. Food Quality 18(5) October/November. Pg 36-40 Wiley-Blackwell.

Hampton, B. 2000. Use of Ozone for Winery and Environmental Sanitation. Practical Winery and Vineyard Journal. Jan./Feb. 2000.

McDonnell, G. E. 2007. Antisepsis, Disinfection, and Sterilization. Types, Action and Resistance. ASM Press Washington, D.C.

Pesticides: Topical & Chemical Fact Sheets. U. S. Environmental Protection Agency.
http://www.epa.gov/pesticides/factsheets/index.htm

Pfuntner, A. 2011. Sanitation, Sanitizers and Disinfectants: The Chemicals of Prevention. Food Safety Magazine August/September 2011.

Sanitizers for Food Plants. 2007. UC Davis Seafood Network Information Center. Sea Grant Extension Center.
http://seafood.ucdavis.edu/pubs/sanitize.htm

Schmidt, R. H. 2003. Basic Elements of Equipment Cleaning and Sanitizing in Food Processing and Handling Operations. University of Florida IFAS Extension. http://edis.ifas.ufl.edu/fs077.

Table 1. Properties of Chemical Sanitizers

	Hypochlorites (bleach)	Chlorine	Chloramines (Chloramine T)
Germicidal Action	Bacteria, viruses, fungi including parasite and bacterial spores at high concentrations (5,000-6,000 ppm EPA)	Bacteria, viruses fungi including parasite and bacterial spores at high concentrations	Bacteria, viruses, fungi slower acting than bleach, chlorine. Not effective against spores
General uses	Food contact surfaces, rinse water for fruits and vegetables, CIP, utensils, 200 ppm for no rinse application (FDA)	Cooling, pool and spa water, rinse water for fruits and vegetables, food contact surfaces, utensils	Food contact surfaces and utensils, drinking water and other water sources
Form	Concentrated solution, powder or pellet	Compressed gas or liquid	White powder
General use dilution	25 – 200 ppm	25 – 200 ppm	50 – 200 ppm
pH	Best at pH 6.0-7.5	Best at pH 6.0-7.5	Best at pH 6.0-7.5
Temperature	Cold water (maximum at 115°F)	Cold water (maximum at 115°F)	Cold water (maximum at 115°F)
Corrosion	Slight to moderate, corrosive below pH 6	Slight to moderate, corrosive below pH 6	Low
Stability (use dilution)	Fair	Fair	Good, better than hypochlorites
Toxicity (use dilution)	Low	Low	Low
Irritant (use dilution)	Low	Low	Low
Vapors (working concentration)	None at correct pH	None at correct pH	None at correct pH
Penetration	Poor	Poor	Poor
Hard Water	Decreased efficacy in hard water (>500 ppm)	Decreased efficacy in hard water (>500 ppm)	Decreased efficacy in hard water (>500 ppm)
Organic soil tolerance	Marked loss of efficacy in presence of organic soils	Marked loss of efficacy in presence of organic soils	Superior to hypochlorites, but some efficacy loss evident
Residual biocide activity after use	None	None	Slight
Advantages	Inexpensive, good choice for stainless steel surfaces and utensils	Inexpensive, good choice for stainless steel surfaces	Fewer byproducts and longer lasting than bleach, low toxicity
Disadvantages	Requires strict pH and concentration control for maximum activity. Highly corrosive if improperly used. Possible carcinogenic by-products	Requires strict pH and concentration control for maximum activity. Highly corrosive if improperly used	Slower acting than bleach

Table 1. Properties of Chemical Sanitizers

	Acidified Sodium Chlorite (ASC)	Chlorine dioxide (gas)	Chlorine Dioxide (liquid)
Germicidal Action	Bacteria, viruses, fungi including parasite and bacterial spores at high concentrations	Bacteria, viruses, fungi including parasite and bacterial spores at high concentrations	Bacteria, viruses, fungi including parasite and bacterial spores at high concentrations
General uses	Surface disinfectant, water	Area fumigation and water sources	Surface disinfectant, water
Form	Liquid	Gas	Liquid
General use dilution	500 - 1200 ppm	3 ppm residual for water rinse, 0.5 to 30 ppm for sanitation	3 ppm residual for water rinse, 200-500 ppm for sanitation
pH	2.5 – 2.9	Wide range (4.0 - 9.0)	Wide range (4.0 - 9.0)
Temperature	Most effective at low to warm temperatures	Good at low temperatures	Good at low temperatures
Corrosion	Minimal	Minimal	Yes, under acidic conditions
Stability (use dilution)	Good	Moderate	Moderate
Toxicity (use dilution)	Relatively nontoxic	Yes	Yes
Irritant (use dilution)	Yes	Yes (oxidizer)	Yes (oxidizer)
Vapors (working concentration)	Minimal	Dangerous	Dangerous
Penetration	Good	Good	Poor
Hard Water	Minimal effect	Minimal effect	Minimal effect
Organic soil tolerance	Yes	Yes	Yes
Residual biocide activity after use	No	No	No
Advantages	FDA approved for use on meat, seafood, raw agriculture commodities and water (21CFR173.325), effective in removing milkstone and hard water films, good for CIP	No residues, requires lower concentrations compared to hypochlorites, does not form chlorinated organic compounds	FDA approved for use on meat, seafood, raw agriculture commodities and water (21CFR173.300), does not form chlorinated organic compounds
Disadvantages	Low pH required	Must be produced on site, expense of gas generating equipment, requires gas tight enclosure for use	Requires automated equipment for production, toxic vapors produced at high temperatures

Table 1. Properties of Chemical Sanitizers

	Ozone	Carboxylic Acid (fatty acid)	Iodine Compounds (Iodophors)
Germicidal Action	Bacteria, viruses, fungi including parasite and bacterial spores at high concentrations	Bacteria, virus, fungi. May inactivate spores at high concentrations	Bacteria, fungi, viruses, and some parasites, not recommended for spore control
General uses	Area fumigation and surface disinfectant (liquid), approved for use on organic foods (USDA Nat'l Organic Program)	Surfaces, processing equipment and utensils	Surface and utensil disinfectant, brewery, dairy and food processing equipment. Floors and walls at 68 – 100 ppm
Form	Gas or liquid	liquid	liquid
General use dilution	0.2 – 3.0 ppm	39 ppm (no rinse application) 70 – 1500 ppm	12.5 – 25 ppm (no rinse application)
pH	Not applicable	3.5 - 4.0	3.0
Temperature	Stable at low temperature (86°F and below)	May lose efficacy below 50°F	Minimum temperature 75°F Maximum 120°F
Corrosion	Slight to moderate, more corrosive at sporicidal concentration	Slight	Slight to moderate, depending on concentration
Stability (use dilution)	Low	Yes	Moderate
Toxicity (use dilution)	Possible	Minimal	No
Irritant (use dilution)	Yes (oxidizer)	Low	No
Vapors (working concentration)	Yes	No	No
Penetration	Yes	No	No
Hard Water	Minimal effect	Minimal effect	Minimal effect
Organic soil tolerance	Marked loss of efficacy in presence of organic soils	Good	Some loss of efficacy in presence of organic soils
Residual biocide activity after use	None	Minimal	Moderate
Advantages	Environmental friendly, fast acting, treatment recognized as organic	Relatively non-corrosive, FDA approved for no rinse use (39 ppm). Low foaming depending on wetting agent, stable at high temperature	Relatively non-corrosive, FDA approved for no rinse use at 25 ppm, little environmental concerns (Docket number EPA-HQ-OPP-2006-0599)
Disadvantages	Must be produced on site, expense of ozone generating equipment	May corrode some metals and plastics	Requires low pH (< 3.0) for activity, can stain materials, not effective on spores

Table 1. Properties of Chemical Sanitizers

	Quaternary Ammonium Compounds	Acid Anionics (Organic acid plus wetting agent)	Peracetic Acid (with hydrogen peroxide)
Germicidal Action	Bacteria (especially *L. monocytogenes*, less effective against Gram negative), molds. Not for use against spores	Bacteria, virus, fungi. Ineffective against some food spoilage organisms	Bacteria, virus, fungi. May inactivate spores at high concentrations. EPA approved for anthrax spores
General uses	food contact surfaces, floors, drains	Food processing equipment and utensils	Food and dairy processing equipment, utensils, and poultry carcass rinse
Form	Odorless, colorless liquid	liquid	Liquid
General use dilution	200 ppm (no rinse)	400 ppm (30 ppm no rinse)	315 ppm
pH	Broad range activity	2.0 – 3.0	Broad range activity
Temperature	Broad Range	Broad Range	Works well at low temperatures
Corrosion	None at 200 ppm	Some metals	May effect galvanized steel
Stability (use dilution)	Good	Good	Good
Toxicity (use dilution)	None	Low	Low
Irritant (use dilution)	None	Low	Yes, strong oxidizer
Vapors (working concentration)	None	Yes	Yes
Penetration	Good for porous surfaces	Good	Good
Hard Water	Decreased efficacy in hard water	Decreased efficacy in hard water	Minimal effect
Organic soil tolerance	Good	Good	Good
Residual biocide activity after use	Yes	Minimal	Minimal
Advantages	Relatively non-corrosive, FDA approved for no rinse use (200 ppm). Safe for use as environmental sanitizer at 1,000 ppm. Effective against biofilms.	Good for CIP in combination with low foaming wetting agent.	May be used in CIP, EPA registered as a no rinse sanitizer. Effective against biofilms, works well at low temperatures, approved for use on organic foods
Disadvantages	*E. coli*, Pseudomonas, other Gram negative bacteria, and spoilage organisms can be resistant at 200 ppm.	Relatively expensive, may cause foaming depending on wetting agent, strict low pH range for activity.	Expense, not effective against some molds and yeast, requires precise mixing with H_2O_2

Table 2. Sanitizer Effectiveness and Compatibility

Cleanser/ Sanitizer	Common Form	Effectiveness	Compatibility*
Peracetic Acid (PAA)	Colorless liquid with "vinegar" odor. Breaks down into water, oxygen and acetic acid. Corrosive to skin and mucous membranes, proper PPE required. (150 – 200 ppm)	Effective against all bacteria, viruses and fungi. Effective against spores at high (1000 ppm or more) concentrations. CIP compatible since it is non-foaming. Environmentally friendly, GRAS rated, FDA approved for direct food contact and food contact surfaces. Can be used in non-rinse procedures	Compatible with stainless steel and most other metals, neoprene & butyl rubber, ceramic and glass. Do not use on brass, nickel, aluminum, iron, copper, galvanized metal or polyurethane
Hydrogen Peroxide H_2O_2 (liquid)	Colorless liquid. Breaks down into water and oxygen. Corrosive to skin and mucous membranes at high concentrations, proper PPE required	Effective against all bacteria, viruses and fungi. Effective against spores at high (25-60%) concentrations. EPA approved for treatment of food and non-food crops, fruits and vegetables. 35% H_2O_2 FDA approved for sterilization of food packaging and containers (21CFR178.1005), approved for use on organic foods (USDA National Organic Program) Environmentally friendly	Compatible with stainless steel, aluminum, bronze, cast iron, PVC, natural rubber, ceramic, polycarbonate and polypropylene. Do not use on brass, copper, neoprene, carbon steel, or nitrile
Hydrogen Peroxide H_2O_2 (gas)	Vaporous H_2O_2 is produced from liquid H_2O_2 (30-50%) by "flash vaporization"	Effective against all bacteria, viruses and fungi. Effective against spores at high concentrations (500 ppm). Can deactivate certain toxins and chemicals Environmentally friendly, decomposes to water & oxygen	Compatible with stainless steel, aluminum, bronze, cast iron, PVC, natural rubber, ceramic, glass, polycarbonate and polypropylene. Do not use on nylon, copper, brass, neoprene, carbon steel, or nitrile. Low temperature allows sterilization of electrical equipment. (EPA tested compatible with DVD & CD discs, cell phones, fax & copier machines, copper & aluminum electrical sockets.)

*This information is presented as a guideline only. Compatibility depends on many factors including pH, temperature and concentration. Consult a specialist to determine the exact conditions of your sanitizer and its compatibility to your facility.

Table 2. Sanitizer Effectiveness and Compatibility

Cleanser/Sanitizer	Common Form	Effectiveness	Compatibility*
Chlorine Dioxide ClO_2 Liquid	Typically used at 200-500 ppm	Effective against all bacteria, viruses and fungi. Effective against spores at higher concentrations. EPA approved for use on anthrax spores at 500 ppm	Compatible with aluminum, ceramic, PTFE (Teflon). Do not use on cast iron, neoprene, polypropylene, 316 stainless steel, polyurethane, nitrile, polyethylene, natural rubber
Chlorine Dioxide ClO_2 Gas	Typically used at 0.5 to 30 ppm	Effective against all bacteria, viruses and fungi. Effective against spores at higher concentrations. EPA approved for use on anthrax spores (750 ppm, 12 hr exposure)	Little evidence of corrosion at sanitation levels (0.5 - 30 ppm). EPA tests show corrosion on computers and electrical wiring at 750 ppm, 12 hr exposure
Formaldehyde	Clear colorless liquid, with pungent odor. Miscible in water	Effective against all bacteria, viruses and fungi. Effective against spores at higher concentrations. Not environmentally friendly. Listed as OSHA "select carcinogen". Requires special storage and disposal methods due to carcinogenicity and flammability	Compatible with stainless steel, aluminum, brass, bronze, copper, cast iron, nitrile, ceramic, natural rubber, neoprene, polypropylene, PVC. Do not use on carbon steel
Ethylene Oxide	Gas (400 – 1200 ppm sterilization concentration), sometimes mixed with nitrogen or carbon dioxide.	Effective against all bacteria, viruses and fungi and spores. Not environmentally friendly. Listed as OSHA "select carcinogen". Not used for area fumigation, enclosed chamber use is most common. EPA approved for use on anthrax spores	Compatible with stainless steel, nylon, Do not use on aluminum, brass, cast iron, copper, nitrile, natural rubber, neoprene, polypropylene, PVC, silicone
Chlorine (bleach)	Liquid (200 ppm is maximum for no rinse application)	Effective against all bacteria, viruses and fungi, and parasites at higher concentrations. EPA approved for anthrax treatment at 5,000 – 6,000 ppm	Compatible with stainless steel, PVC, aluminum. Do not use on polyurethane, natural rubber, nitrile, carbon steel, cast iron

*This information is presented as a guideline only. Compatibility depends on many factors including pH, temperature and concentration. Consult a specialist to determine the exact conditions of your sanitizer and its compatibility to your facility.

Table 2. Sanitizer Effectiveness and Compatibility

Cleanser/ Sanitizer	Common Form	Effectiveness	Compatibility*
Chloramines **(Chloramine T)**	Colorless liquid	Effective against most bacteria, viruses, mold and fungi. Mainly used in water purification	Generally non corrosive at use concentrations. Will degrade nitrile and other type materials.
Ozone	Gas (0.2 to 10.0 ppm). Can be added to distilled water for use as an aqueous disinfectant	Effective against all bacteria, viruses and fungi. Effective against spores and parasites at higher concentrations and more corrosive at these concentrations. Environmentally friendly (by products are water and oxygen), Use on food is FDA approved	Compatible with stainless steel, polyurethane. Slight corrosion on aluminum, brass, bronze, PVC Do not use on nitrile, neoprene, natural rubber
Iodophors	Liquid (12.5 – 25 ppm for no rinse applications; 68 – 100 ppm for floors and walls)	Effective against bacteria, viruses, mold and fungi. Not effective against bacterial spores	Compatible with PVC, most metals, polypropylene, Slight corrosion on aluminum and bronze. Do not use on silicone. Will stain plastics, cloth and surfaces
Quaternary Ammonium Compounds	Odorless, colorless liquid (200 ppm for no rinse applications; 400 – 1,000 ppm for floors and walls)	Effective against most bacteria, some viruses, mold and fungi. Poor activity against *E. coli* and spoilage bacteria at 200 ppm. Not effective against spores	Relatively non corrosive to most surfaces, depending on formulation. Some may be corrosive to certain metals
Citric Acid	Colorless liquid	Effective against virus, fungi and bacteria at 2.5 to 8% concentrations. Environmentally friendly, FDA listed as GRAS, approved for use on organic foods (USDA National Organic Program)	Compatible with stainless steel, natural rubber, nitrile, neoprene, PVC, Do not use on aluminum, carbon steel, cast iron, copper
Acid Anionics	Liquid	Bacteria, virus, fungi. Not recommended for spores	Compatible with stainless steel but may be corrosive to other metals.
Carboxylic Acid (fatty acid)	Liquid	Bacteria, virus, fungi. Not recommended for spores	Compatible with stainless steel but may be corrosive to other metals, plastics and rubber.

Notes

Notes

Notes

Innovative Food Defense Project

Contact Dr. Cosby at 919-733-7366 (mark.cosby@ncagr.gov) for more information

Disclaimer:
Funding for this project was made possible, in part, by the Food and Drug Administration through grant 1R18FD004286-01, views expressed in written materials or publications and by speakers and moderators do not necessarily reflect the official policies of the Department of Health and Human Services; nor does any mention of trade names, commercial practices, or organization imply endorsement by the United States Government.

DRAFT GUIDANCE

8

INNOVATIVE FOOD DEFENSE PROGRAM

Decontamination Analysis and Verification

After cleaning and sanitation of the contaminated area, verifying that the area and equipment have been successfully sanitized is required before production can resume. Decontamination verification is part of the overall remediation strategy and therefore a detailed plan should be designed and in place before cleaning and sanitation begins. Doubtless plans will be modified as work progresses however; all steps must be verified and any changes approved by local, state, and federal officials. Close communication with regulatory officials should expedite approvals to resume production.

There are a number of verification procedures available to facility managers to choose from. You must keep in mind the use of a procedure and/or sampling tools must be validated that it will work effectively in your facility. In other words, there is certification that the method will function as intended to give reliable results. Certification can be from FDA, USDA, EPA, AOAC International, AFDO or other regulatory bodies and should be supplied by the manufacturer of the method(s) and their applications.

Who Should Follow The Guidance in these Documents?

Decontamination verification is just one part of the remediation strategy plan and is ultimately the responsibility of the owner(s) of RTE-food processing facilities. Facility managers, quality assurance and quality control personnel should initiate and develop these plans and would benefit by following the guidance documents in this series. Facility supervision personnel should provide training sessions for all employees in the implementation of preventative and remediation plans adopted. It is our hope that all RTE-foods processors will benefit from following these recommendations to help avoid the product contamination/plant closure scenario.

How Do these Documents Relate to the FDA GMPs and Other Regulations?

These documents are not meant to supersede any FDA or USDA guidelines, requirements or recommendations. The guidance and recommendations in this and all accompanying documents are meant to compliment those of current GMPs and the newly adopted Food Safety Modernization Act. Any regulations currently required by FDA or USDA must be followed.

Methods of Decontamination Verification

Visual Inspection – While visual inspection cannot be the sole verification method, it is a very important, quick first step to help verify whether the cleaning process was adequate. A well trained inspector or quality control analyst with a good flashlight will be able to detect residue in equipment corners, weld joints, bolt or screw heads and threads, pipe connections, door jams, floors, and a whole host of other areas. This inspection will be required before the decontamination process takes place.

ATP Bioluminescence – ATP bioluminescence is a procedure that has been available for 20-30 years. ATP (adenosine triphosphate) is a compound found in all organisms, body fluids (i.e., blood), food, and other organic matter. Bioluminescence could be considered an adjunct to visual inspection since even after thorough cleaning, residue can persist on equipment and surfaces that is not visible to the naked eye. A swab is used to collect a sample from a surface, placed in a hand held apparatus and the ATP is converted to a light signal measured in minutes. A strong light signal indicates residue is present on the surface and cleaning was not adequate. This is not a direct measurement of bacteria but a measurement of organic matter containing ATP. Technological developments are moving towards sensitivities that will allow this procedure to measure only bacterial ATP but at the present time bioluminescence is generally considered to be an indicator of adequate cleaning and good hygiene.

The advantage of this is method is that results are collected very quickly. On the other hand, the method is a qualitative test, not quantitative, and the operator should be aware of this. Certain cleanser and/or sanitizer residue may adversely affect the accuracy of the assay. Different surface structures or compositions will also affect the accuracy. There are also several brands of bioluminescence tests that measure protein deposited on surfaces. This analysis can be useful in facilities where flours and grains are used.

Environmental (Sponge and Swab) Sampling – Sponge and swab sampling are likely the most common form of decontamination verification. They are used to collect and detect bacterial cells, spores, and viruses from all surfaces in a facility. Swabs are generally made of cotton, polyester, polyurethane, nylon or alginate and spun onto a wooden or plastic stick. Sponges are generally made of cellulose and may be attached to a plastic applicator if desired. Swabs are purchased sterilized and in tubes with or without liquid carrying buffer. Carrying buffer is a liquid medium which protects the microorganisms during transit to the laboratory.

Sterile sponges are packaged in plastic bags pre-moistened with liquid carrying buffer or dry, the carrying buffer added to the dry sponge before sample collection. Sponges are preferred over swabs since more pressure can be applied to the sample area, thereby having a greater chance of dislodging cells adhering to surfaces or in biofilms. Swabs should only be used to sample small cracks and crevices. Once the sample is aseptically collected, the swab/sponge is placed back into its container and sent to a lab to determine presence or absence of bacteria. Normally, the samples are examined for the presence/absence of microbial pathogens, but in some cases they may be used to quantitatively determine bacterial load on a surface, usually total bacterial counts, coliform counts, or *E. coli* counts. Extreme care must be taken in evaluating this type of data since 100% recovery cannot be achieved and sampling effectiveness can be below 50% of total microorganisms on the surface, depending on the sampling method and type of surface being sampled.

The inspection/investigation team will conduct a walkthrough examination of the area(s) to be tested prior to environmental sampling to determine the locations to sample and the number of samples to be taken. Specific areas of any food processing facility to be analyzed by environmental sampling are normally divided into "zones", which indicates the level of importance of the samples.

Zone 1: Zone 1 refers to all direct food contact surfaces such as slicers, mixers, conveyors, utensils, racks, work tables and any pipes or electrical conduit that may be above food contact areas. (Direct food contact surfaces prior to the cooking, or "kill-step" point in the processing protocol should not be considered zone 1.)

Zone 2: Zone 2 encompasses the areas directly adjacent to food contact surfaces (zone 1). These are areas where environmental contamination is most likely to directly affect safety of the product. Zone 2 encompasses all non-food contact surfaces in the processing area, such as the exterior of equipment, chairs, step stools, equipment framework, food carts, equipment housing, gears, ventilation and air handling equipment, and floors. Floor mats and anti-fatigue rugs often harbor contaminants and should not be overlooked during the sampling process. In large areas, (e.g. 20,000 square feet) zone 2 is the area around the exposed product in which you could envision a pathway to product contamination either through the actions of man or machine; for example, even a far corner of the room could be considered zone 2 if foot traffic or forklifts move through that area and these traffic patterns also go very near a line where exposed food is conveyed or held, or ventilation patterns cause airflow from these remote areas.

Zone 3: Zone 3 surrounds zone 2 and is an area which, if contaminated with a pathogen, could lead to contamination of zone 2 via actions of humans or movement of machinery. Examples of zone 3 areas include corridors and doorways leading into food production areas or areas in a large production room that are further away from food handling equipment than typical zone 2 areas. This could include walls, phones and fire extinguishers. Brooms, squeegees, mops, floor scrubbers, forklifts and hand trucks, while stored in zone 3 areas could easily be considered zone 2 if used close to direct food contact areas and should not be overlooked during the sampling process. Likewise, wheels on any equipment in zone 3 should be sampled if they are used close to direct food contact areas.

Zone 4: Zone 4 is an area which, if contaminated with a pathogen, could lead to contamination of zone 3 via the actions of humans or machinery, but is almost always prior to the cooking or "kill-step" point in the production process. Examples of zone 4 areas include an employee locker room if not immediately adjacent to food production rooms, dry goods storage warehouse, cafeterias, hallways, and loading dock area.

Contact Plates - There are several variations of the contact plate method but all employ the process of placing a plate or applicator filled with solid growth medium in direct contact with a flat surface, pressing slightly to get good contact, and then incubating the plate/applicator and counting total colony forming units (CFU) per applicator (a measure of the number of microorganisms on the surface). The growth medium used can be selected to recover aerobic bacteria, yeast and fungi, or can be selective for coliforms or pathogens. Common methods are hydrated Petrifilm™ (3M), RODAC™ plates, and agar slides. In theory this method can be used as a quantitative analysis of microbial counts on any flat surface of processing equipment and other food contact surfaces, as well as environmental surfaces such as floors, walls, bins, and transport equipment. As above, care must be taken in evaluating this type of data since 100% recovery of microorganisms cannot be achieved and sampling effectiveness can be below 50% depending on the sampling method and type of surface (e.g., steel, glass, rubber, polyethylene, porous, nonporous) being sampled. Also, residual cleansers and sanitizers will affect microbial recovery. Consult with all regulatory officials before proceeding with these methods.

Air Sampling – Airborne contamination of product is always been a concern during the normal operation of food processing plants. Good Manufacturing Practices (GMP) Section 110.20 Part(6) states the facility shall "provide adequate ventilation or control equipment to minimize odors and vapors (including steam and noxious fumes) in areas where they may contaminate food; and locate and operate fans and other air-blowing equipment in a manner that minimizes the potential for contaminating food, food-packing materials and food contact surfaces." Control of airborne contamination is especially important due to the heightened generation of dust and aerosols throughout the remediation process.

There are several methods of air sampling and the selection of the most effective technique is determined by the type of facility and remediation process.

Impaction is a process whereby air is drawn by vacuum into a mechanical collector and impacts onto the surface of a plate filled with solid agar growth medium. After a certain concentration of air has been collected the growth medium plate is incubated and bacteria are counted. Small particles may not impact onto the agar surface which will reduce the efficiency of the sampling. Also, the flow of air can dehydrate the growth medium which can inhibit the growth of the collected microorganisms.

Sedimentation is the process where solid agar growth medium in a plate (or hydrated Petrifilm™) is placed on a surface and airborne microorganisms are allowed to settle onto the surface by gravity over a certain period of time. The drawback of this method is that there is no way to measure the amount of air being sampled.

Gelatin membrane filtration may be the most efficient method of microbial air sampling in that all air entering the sampler must pass through the gelatin filter, eliminating the blow by experienced with impaction. The gelatin filter is highly hydrated which nearly eliminates the problems of growth medium dehydration and the small pore size of the filter insures collection of small particles which would be missed by impaction. Once air collection is complete, the gelatin filter is removed from the sampler and placed on a plate filled with solid agar growth medium and incubated the same as a contact plate. Colony forming units per plate are counted which relates to the air volume collected in the sampling process. Recent improvements in the technology of the gelatin membrane filtration method allow a precise measurement of airborne bacteria in a variety of environments and applications.

Biological Indicators – Biological indicators are normally used to verify the effectiveness of steam sterilization but are can also be used to verify decontamination using gas or vapor phase sterilizing agents such as chlorine dioxide, hydrogen peroxide, and ozone. The indicator consists of a strip impregnated with viable spores and a vial of growth medium all placed in a plastic vial permeable to the sterilant. Vials of growth medium and treated strip are placed in specific locations in the decontamination area and then placed in an incubator (after the growth medium is released) after decontamination. No growth in the vial verifies successful decontamination. Their use is limited in that they can only be used in enclosed areas where gas/vapor decontamination is feasible, but as the cost of gas/vapor generators drops they will become more common. An advantage of these indicators is that they are used during the decontamination process; but it still requires an incubation period of 2-7 days to complete the verification. They have also been used to verify decontamination by radiation.

Finished Product Testing – Finished product testing will routinely be required after the cleaning and sanitizing procedures have been verified and accepted by regulatory officials. Sample selection and sample sizes must be carefully determined to ensure a meaningful, statistically relevant collection is tested. Sample type and size should be resolved as part of the initial remediation strategy and receive approval from regulatory officials. One should keep in mind that obtaining a statistically relevant sample collection from any lot for which you can be confident that that lot is not contaminated is extremely difficult, if not impossible. This is why cleaning/decontamination verification and environmental sampling are so vital to the remediation process prior to production restoration.

It is vitally important that the members of the remediation team realize that decontamination verification is the most important aspect of the restoration process and that all verification methods have limitations as described above. It may be necessary to develop unconventional decontamination methods for a specific food production process. This will require innovative decontamination verification methods, always be based on sound science and meet the approval of all local, state, and federal officials.

Definitions

Aseptic sampling – or asepsis; the process of collecting samples where no outside contamination (i.e., from sampler's hands) can occur

Biofilm – a mucilaginous film built by bacteria on surfaces that resists cleaning and sanitizing. Dental plaque and sludge covering the interior of drain pipes are good examples.

Agar growth medium – A solid growth medium for the growth of microorganisms whereby cells can grow to colonies, visible to the naked eye for counting.

CFU- Colony forming units. A measure of living microorganisms in a sample. The sample is placed on agar growth medium and after incubation the microorganisms grow to colonies visible to the naked eye.

Qualitative analysis – Measurements whereby the presence of absence of microorganisms or other contamination are present.

Quantitative analysis - Measurements whereby the number of microorganisms or concentration of other contaminants are determined.

Spores – a non-growing, but viable form of a microorganism's life cycle. Similar to plant seeds, a spore resists unfavorable conditions (lack of water or nutrients) and will germinate when favorable conditions are presented.

Innovative Food Defense Project

Contact Dr. Cosby at 919-733-7366 (mark.cosby@ncagr.gov) for more information

Disclaimer:
Funding for this project was made possible, in part, by the Food and Drug Administration through grant 1R18FD004286-01, views expressed in written materials or publications and by speakers and moderators do not necessarily reflect the official policies of the Department of Health and Human Services; nor does any mention of trade names, commercial practices, or organization imply endorsement by the United States Government.

DRAFT GUIDANCE

9

INNOVATIVE FOOD DEFENSE PROGRAM

Facility Characterization, Site Containment and Preparation

Once a contamination incident has been found, it is vital that the area of contamination be identified and isolated as soon as possible. For small facilities, this might mean shutting down the entire production area; for larger facilities this means isolating the contaminated area and restricting traffic in this area from non-affected locations in the plant.

Who Should Follow The Guidance in these Documents?

Facility characterization and site preparation is just one part of the remediation strategy plan and is ultimately the responsibility of the owner(s) of RTE-food processing facilities. Facility managers, quality assurance and quality control personnel should initiate and develop these plans and would benefit by following the guidance documents in this series. Facility supervision personnel should provide training sessions for all employees in the implementation of preventative and remediation plans adopted. It is our hope that all RTE-foods processors will benefit from following these recommendations to help avoid the product contamination/plant closure scenario.

How Do these Documents Relate to the FDA GMPs and Other Regulations?

These documents are not meant to supersede any FDA or USDA guidelines, requirements or recommendations. The guidance and recommendations in this and all accompanying documents are meant to compliment those of current GMPs and the newly adopted Food Safety Modernization Act. Any regulations currently required by FDA or USDA must be followed.

The first steps of isolation, containment, and restoration should be:

- Erection of temporary walls surrounding the contaminated area, using lumber or metal covered with plastic sheeting, tarps or other components to eliminate air flow from the contaminated area to non-contaminated areas.
- Erection of roofs, if necessary, to further isolate the area and eliminate the possibility of dust or organic material from entering or exiting the contaminated area
- Establishment of specific entry and exit points to the contaminated area, with proper decontamination controls such as disinfectant hand wash stations, foot baths, and any PPE that may be required before entering the contaminated area. A personnel monitor should be assigned to each entrance/exit point to assure that all workers are following the specific rules of restricted access to the area.
- Institute a training program to establish sanitary guidelines for all persons expected to enter the contaminated area and insure that these guidelines are followed. This includes any outside contractors required.
- Establish a team to work with local, state, and federal officials to insure that all remediation and decontamination verification procedures developed are accepted and approved by these organizations. Document all decontamination and remediation procedures on a daily basis to insure that these procedures are being followed to the expressed approval of these officials.
- Assign a person or persons as the communication executive(s) to inform employees at the facility of the restoration work required, the expected time required to complete the process, and the areas that are under restricted access. These individuals may be required to deal with the media, public, and regulatory officials as to the daily progress of the restoration process
- Ideally, all tools and equipment required for restoration should be sanitized before entering the containment area and left

in the area as dedicated tools for the duration of the remediation process. If this is not possible, a procedure to sanitize tools and equipment before entry must be constituted and followed by all employees, including outside contractors, and verified by the personnel monitor(s).

- Monitor the area outside of the containment area daily to assure that no failure in containment has occurred. This may be accomplished by air sampling and physical observation of the containment walls, roof, and surrounding floor for breaches in the isolation system.
- Establish a specific area of storage for all equipment, chemicals, cleansers, and sanitizers directly related to the remediation process and limit access of this area to individuals directly involved in the remediation process. This may require the rental of storage containment containers.
- Establish a designated area for all equipment that will be removed from the contaminated area for cleaning and sanitizing. This area must be isolated from the normal clean out of place areas of normal facility operation if other areas are still producing product.
- Establish a designated storage area for all waste materials coming from the contaminated area, limiting access only to those directly related to the remediation process.
- Construct a waste disposal plan that meets with all local, state and federal regulations
- Once remediation is complete, consult with local, state and federal officials to confirm that the restoration and decontamination procedures meet all regulatory requirements before starting normal processing procedures

Innovative Food Defense Project

Contact Dr. Cosby at 919-733-7366 (mark.cosby@ncagr.gov) for more information

Disclaimer:
Funding for this project was made possible, in part, by the Food and Drug Administration through grant 1R18FD004286-01, views expressed in written materials or publications and by speakers and moderators do not necessarily reflect the official policies of the Department of Health and Human Services; nor does any mention of trade names, commercial practices, or organization imply endorsement by the United States Government.

DRAFT GUIDANCE

10

INNOVATIVE FOOD DEFENSE PROGRAM

Contaminated Waste Disposal

Introduction

If a food processing facility, its production system or final product has been contaminated by microorganisms, materials that are or suspected to have been contaminated during processing, cleaning, disinfection, or recovery operations must be handled, transported, and disposed of in a safe and regulatory acceptable manner. Effective implementation of these disposal activities is critical to a successful food contamination event response. This document provides considerations and recommendations for accomplishing those objectives.

Event Approach

The approach used is based on the classic response questions of who, what, when, where, why, and how. Disposal of affected materials should be determined immediately following event identification and containment.

1. Who – In any food contamination event the "Who" is likely a broad collection of individuals agencies and organizations. Who is requiring action in response to a contamination event? Who is defining the response methods to be followed in addressing the contamination? Who is determining the criteria to which a successful response is measured? Who is carrying out the response activity? Who is evaluating progress toward the objective criteria? And, most important, who is paying the bills for the response?

   These broad questions would be focused down to the specifics of each disposal activity.

2. What – In the characterization of the contamination event, the type and nature of waste hazard(s) will need to be identified and defined in order to plan for safe and proper collection, processing, containment, packaging, and disposal.

3. When – The urgency of decisions for waste related questions and activities will be determined by the hazards which they pose, their stability, their quantities, and the influence they have on the overall response objectives.

4. Where – During a contamination event response there will likely be numerous locations and processes from which waste materials are generated, methods by which the will need to be packaged or processed, transportation and destinations to which they will need to be delivered. All of these locations and routes will need to be identified, classified, and appropriately protected.

5. Why – The principle reasons why proper disposal is so critical in a contamination response event are prevention of spread of the contaminant, elimination of further human or animal exposure, and facilitation of effective clean-up and return to safe food production.

6. How – The methods, agents, and individuals carrying out an effective contamination event response will be determined as the event is identified and the clearance goals defined. Critical factors in this determination include what is contaminated, what is the contaminant, what are effective decontamination strategies, how much contamination is suspected, what are the hazards to humans and animals, and what funding is available.

Response Considerations

1. In the early stages of a suspected food contamination event there are usually a significant number of unknowns regarding characterization, resources, and response. At this point it is critical to identify potentially contaminated equipment and materials and quarantine

or isolate them until clearer information is available regarding what actually needs to be addressed. During this period no disposal activity should take place, unless failure to do so would create a greater risk to humans, animals or the environment. An example of this situation would be suspected contamination at a meat packing plant. In such an event the appropriate options might be to refrigerate or freeze the suspected meat products in an isolated location away from personnel and non-impacted product. By-products that could not be safely refrigerated/frozen should be sent for thermal destruction or alkaline hydrolysis.

2. As the event response is better defined and organized, each potential waste stream must be identified, characterized, and provided with a detailed disposal procedure. A procedure must also be implemented for tracking and verifying the accomplishment of each step of these procedures for every waste stream.

3. Critical information in every waste stream disposal activity will include the following:

    a. Who must approve the procedure?
    b. Who will carry out the required procedure?
    c. What would be the potential hazards?
    d. What special precautions will be required?
    e. How will these hazards be mitigated?
    f. How will the waste be prepared and packaged?
    g. Will preliminary decontamination be required, if so, how?
    h. How will it be transported, by whom, and to where?
    i. Is this an interim storage of the waste material? For how long?
    j. What documentation will be required?
    k. Who is responsible for the waste material during each step?

4. Characterization of each potential waste material will be critical in determining the method and procedure for its disposal.

    a. Non-hazardous material can be handled in accordance with normal facility waste disposal guidelines and existing waste processing facilities.

    b. Materials that are determined to be or suspected of containing pathogens hazardous to humans or animals are much more limited in approved disposal methods. These items either must be preprocessed to remove or neutralize the pathogens in an approved manner, or they will have to be disposed of by incineration, gasification, other approved chemical or oxidation method.

    c. Preprocessing might include cooking, pH alteration, irradiation, or ultraviolet (UV) exposure.

    d. If highly infectious contamination is identified or suspected, then the entire disposal process as well as the event response moves to a higher protection level for personnel, animals and the environment. The available resources and qualified response personnel are reduced significantly. In the case of highly hazardous contamination events, facility or process recovery strategy may be replaced by containment and destruction of the facility or the affected portion thereof.

5. Timing often influences event disposal strategy because the longer it takes to dispose of contaminated materials, the more difficult and expensive the process becomes. The earlier that hazards can be safely addressed, the smaller the size of the impacted area, the less impact on material and equipment, the smaller the response effort required, and potentially the lower the cost of the response.

6. Technology also can influence the disposal effort. Once the waste stream is characterized then the best disposal method can be identified. Continuous technology improvements have created very effective ways for processing and disposing of contaminated materials. The problem with new technology is often the finite amount available, the scarcity of qualified providers, and the high cost of using it.

7. Perhaps the most significant consideration in any contamination event disposal response is cost. If the cost of containing, cleaning, decontaminating, and restoring a food processing or production exceeds the profitability of the potential product

market, the response effort may be limited to the minimal clean-up effort required by statute, law or regulation. Other cost considerations that influence this decision include product acceptance, interim and long-term lost revenues, lost workforce, regulatory fines and penalties, and required process upgrades. In the specific area of disposal there is the financial consideration of long-term liability for the disposal method chose. The originator of a waste material retains responsibility for the disposed material virtually forever.

Disposal Methods

The technologies that currently offer promise in providing major time-of-emergency disposal include:

1. Burial

Burial is the primary disposal method for most food related contamination event response efforts because it is fairly simple, readily available, and economical. Problems with burial:

a. Most food processing facilities do not have the property to allow the onsite burial of significant amounts of waste material and most zoning laws would not permit it

b. Wet or freezing weather or a shallow water table may prevent burial

c. Proximate surface water may prevent burial

d. Burial of improperly sterilized material may contaminate ground water and spread disease

e. Burial on private property may require notation on the property deed and may negatively influence real estate values in the area

f. Burial on processing plant may negatively influence return to normal production, especially with international markets

g. Any contaminated material known or suspected of containing pathogens hazardous to humans or animals cannot be disposed of in a municipal solid waste landfill (MSWLF). If the material is preprocessed to destroy or neutralize the pathogens, the landfill may accept the material

h. MSWLF's are limited on the amount of biological that they can receive and the geographical area that they are permitted to serve

i. MSWLF's may choose what and how much waste material that they are willing to take and the cost to take it, or they may refuse to take a waste material at all

j. Shipment of biological material to a MSWLF requires biosecure transportation, prior notice to and approval by the MSWLF, an open excavation to receive the waste, and immediate covering by the MSWLF to prevent access by birds or vermin

k. MSWLF's are not designed to promote disease destruction or complete material decomposition because of leachate collection and processing requirements

l. MSWLF's generally provide dry entombment of materials

m. Burial tends to move a contamination out of site.

In North Carolina the most common access to burial is through the Solid Waste authority in each county government. These organizations will be aware of the facilities available and the contacts.

2. Composting

Composting is the combination of waste material in a precise recipe of waste, carbon source, moisture and air stimulating oxidation which breaks down the waste and destroys many pathogens. The process will not destroy prions (a protein particle thought to be the agent responsible for Mad Cow Disease) or neutralize chemical contamination. Composting is actually processing waste materials for subsequent use as a fertilizer or mulch, compression into a fuel material, or disposal by burial. Advantages of composting include:

a. Composting can be done onsite, offsite, or a combination thereof
b. It is fairly simple
c. It is a fairly inexpensive process
d. It can destroy many common disease pathogens
e. It can be mechanized

f. It can produce a useful by-product.

3. Problems associated with composting are similar to burial with some additions:

   a. Although initial pathogen kill by composting may be accomplished in a few days or weeks, the complete processes takes several months

   b. On-site composting requires either space in the production structures or significant property commitment

   c. Composting requires a moderate labor commitment over a long period

   d. Mechanized composting will require a moderate financial commitment up front

   e. Local zoning may prohibit composting operations at a particular facility or location

   f. It is difficult to certify a facility free from a pathogen that is being processed on the site

   g. On-site composting may delay the return of the facility to normal production or the marketability of product.

Although composting is carried out at a few MSWLF facilities in North Carolina, the majority of the composting facilities are private. One such company is McGill Environmental Systems, PO Box 61, Harrells, NC, 28444, telephone 910-532-2539.

3. Rendering

Rendering is a process which produces products that can be reused for another purpose or can safely buried. Typical RTE-food production facilities may not need this process, however, small custom butchering shops may find this option useful in response to a remeditation event. Animal carcass and production byproducts are ground and heated to a specific temperature for a finite time to kill pathogens in order to allow use of the resulting oils and meals for food, feed, and fuel production. The use of rendering is subject to there being a rendering company within a reasonable distance to the facility producing the animal materials. Benefits of rendering include:

   a. In North Carolina it offers an existing infrastructure with a known processing capacity

   b. Service can include collection containers, transportation, and biosecurity program

   c. The industry has a good understanding of biosecurity and pathogen destruction capabilities

   d. Rendering process provides a 65% reduction in material mass

   e. Process produces marketable byproducts

   f. Mobile rendering technology is available, but has not yet arrived in the US.

Problems associated with rendering may include:

   a. Facilities are fixed, requiring material to be transported to them

   b. The processing capacity is fixed and additional processing is subject to the amount of normal production business to which a given is committed

   c. Some facilities restrict the type of animal material that they will process based on the ultimate use or destination of their oil or meal

   d. introduction of certain pathogens may influence its return to normal production or the marketing of its products

   e. Processing capacity of a rendering plant is directly influenced by its waste water discharge and air permits and the local landfill receipt capacity for biological materials

   f. Construction of new rendering plants requires years.

There are several rendering companies across North Carolina. One of the larger organizations is Valley Proteins, Inc. based in Winchester, VA at telephone number 800/871-3406.

4. Incineration

Incineration is the thermal destruction of materials by open or trench burn, portable burn box, portable incinerator, industrial furnace, or fixed commercial

waste incinerator facility. In the absence of an emergency declaration all of these incinerators would have some level of EPA air quality regulation. Advantages of incineration include:

a. Incineration may be local or portable

b. Fairly straight forward process

c. High temperature destroys pathogens

d. Good containment when properly carried out

e. Little risk of further contamination

f. Byproduct is a fertilizer or asphalt additive

g. Moderate production potential

h. Controllable process

i. Box burners can handle up to 100,000 lbs/day of mass and solid fuel

j. Will destroy prions when properly done

k. Provides greater than 95% mass reduction.

Potential problems with incineration:

a. Public opinion may be negative, especially in highly visible locations

b. Transportation and process biosecurity must be watched closely

c. Visible smoke and ash draw attention of public

d. Fuel requirement may be greater than the contaminated mass being disposed of

e. Suitable site selection may be difficult

f. In a multi-site event, incineration of materials may require special exemption to EPA regulations to move contaminated material between sites

g. Fire and thermal burn safety are critical

h. Volume of waste material and temperature required will influence the type equipment for required the job.

The availability of contract incineration at fixed facilities in North Carolina is rare, but several contractors serving the state do provide incineration services by hauling outside of the State. One such contractor is Clean Harbors Environmental Services, Reidsville, NC, telephone number 336-342-6106.

5. Gasification

Gasification is enclosed incineration which limits the amount of air in the combustion chamber; thereby reducing the emission contaminants and smoke. Benefits of the gasifier technology include:

a. May be local, portable, or fixed facility

b. Provides high temper destruction of pathogens including prions

c. Good containment and low emissions

d. Little further processing of or risk from resulting material

e. Waste product is the fuel, feed, or fertilizer additive

f. Moderate production capability

g. Controllable Process

h. Mass reduction greater than 95%

i. Possible secondary production of synthetic fuel, electricity, hot water, or steam

Potential problems with gasification include:

a. Limited availability

b. Preprocessing (maceration) required for most effective disposal

c. Biosecurity must be closely monitored

d. Moderate cost involved

Gasification is very limited throughout the country but there is a small equipment supplier in North Carolina that handles units up to about 1,200 pounds per cycle. They are Biomass Marketing Associates at telephone 252/826-4800.

6. Alkaline Hydrolysis
Alkaline hydrolysis is waste processing activity involving a combination of chemical and thermal destruction of protein materials. Advantages of alkaline include:

   a. May be portable or fixed
   b. Natural process
   c. Destroys pathogens, including prions
   d. Reduces mass by 95%
   e. Environmentally safe with proper operation
   f. Byproduct may be used in fertilizer or as a soil additive.

   Potential problems associated with alkaline hydrolysis include:

   a. Limited availability
   b. Limited industry knowledge
   c. Limited cycle capacity and relatively long processing times
   d. Strong base (high pH) required attention to potential burn hazards
   e. Effluent must be pretreated before discharge, or shipped to a large waste disposal facility.

   One producer of portable alkaline hydrolysis technology is Bio-Response Solutions of Pittsboro, ID at telephone 317/892-5200.

7. Microwave Sterilization
Microwave sterilization is a process in which contaminated materials are macerated, exposed to superheated steam, and then transported past 6 to 9 microwave heating sources at a speed appropriate for the pathogens to be destroyed. The byproduct is described as a "sterile confetti" that can be disposed in a non-hazardous material land fill or incinerator. The process was originally developed for the processing of contaminated medical waste.
Some of the advantages of microwave technology include:

   a. May be portable or fixed
   b. Existing technology in the medical industry
   c. Daily capacity of mobile unit approaching 49,000 pounds
   d. Units include integral biosecurity
   e. Equipment available by lease or contract.

   Potential problems with microwave technology include:

   a. Limited number of units available
   b. Limited experience in non-medical environment
   c. May require moderate upfront funding
   d. Limited knowledge in the industry.

   One of the few providers of microwave sanitizers is Sanitec out of California and Indiana, at telephone 818/565-5566.

8. Chemical Pretreatment
Chemical pretreatment is a preprocessing of contaminated waste materials to prevent the spread of pathogens and to stabilize the materials until ultimate disposal decisions can be made. The process involves relatively low hazard materials such as mild acids, mild bases, lime or similar materials.

   Advantages of the chemical pretreatment are:

   a. Contains pathogen spread, stabilizes contaminated waste, and reduces objectionable decomposition
   b. Relatively easy to do, simple blending process
   c. Natural process
   d. Kills most pathogens, but not prions
   e. Low environmental impact
   f. Low cost.

   Potential problems related to chemical pretreatment include:

   a. Grinding or other preprocessing may be required before effective mixing can occur
   b. Biosecurity monitoring critical during process implementation

c. Limited experience in the industry.

Biosecurity is critical during the handling, processing, and transportation activities related to any disposal method. Special attention is required to keep the contamination spreading during clean-up activities.

Method Selection

The selection of the disposal method for contaminated or suspected contaminated materials and clean-up wastes is critical to the effectiveness of the remediation process. The determination of which method(s) of disposal are to be used depends on the contaminant involved, the potential hazards, any specific regulations, the volume of contaminated material, available resources, the urgency of removal, and available funds. The disposal method should be a simple as possible, with the least possible exposure, processing, packaging, and transporting possible. It must be acceptable to the agency having jurisdiction for the accomplishment of the clean-up and any other agency that must approve the return to normal operation. Once selected, the method(s) should be explained to all response personnel involved so they can understand the influence of their activities on the effectiveness of the method and how to minimize their unnecessary exposure to potential hazards relate thereto.

All disposal activities must be thoroughly documented and regularly evaluated. If a selected disposal method proves inadequate to address all of the contaminated materials present, additional methods should be implemented until the event is resolved. Every effort should be made to do the right thing right the first time in order to avoid having to do the activity again or differently.

Information and Assistance

Information and assistance on the subject of event related waste disposal is available from the agencies responsible for regulating food and feed production (NC Department of Health and Human Services and the NC Department of Agriculture and Consumer Services, transportation of materials (NC Department of Transportation and NC Department of Public Safety), response safety (NC Department of Labor) and environmental permitting (NC Department of Environment and Natural Resources). Also, organizations involved in food processing and production, hazardous material incident response, and catastrophic event response can provide advice, referrals, and resources in safe and appropriate disposal.

Definitions

Alkaline Hydrolysis - Alkaline hydrolysis is a waste processing activity involving a combination of chemical and thermal destruction of protein materials

Clearance Goals - Clearance goals are the goals and predictions of what exactly is the expected result after the remediation process. These goals should be designed before any work begins to insure that residual risks are reduced to levels consistent with risk management rationales as determined by state, federal, and local officials.

Gasification - Gasification is enclosed incineration which limits the amount of air in the combustion chamber; thereby reducing the emission contaminants and smoke.

Incineration - Thermal destruction of materials by open or trench burn, portable burn box, portable incinerator, industrial furnace, or fixed commercial waste incinerator facility

MSWLF - municipal solid waste landfill

Prions - A microscopic protein particle thought to be the infectious agent responsible for Mad Cow Disease, scrapie and certain other degenerative diseases of the nervous system

Notes

Innovative Food Defense Project

Contact Dr. Cosby at 919-733-7366 (mark.cosby@ncagr.gov) for more information

Disclaimer:
Funding for this project was made possible, in part, by the Food and Drug Administration through grant 1R18FD004286-01, views expressed in written materials or publications and by speakers and moderators do not necessarily reflect the official policies of the Department of Health and Human Services; nor does any mention of trade names, commercial practices, or organization imply endorsement by the United States Government.

DRAFT GUIDANCE

11

INNOVATIVE FOOD DEFENSE PROGRAM

Sanitary Equipment Design

If a food processing plant and some or all of the refrigerated or frozen ready-to-eat (RTE) foods produced have been contaminated with microbial adulterants, careful steps must be taken to rid the plant of these adulterants and help prevent their recurrence. This document is provided in a series to address recommendations on controls to reduce the potential of contamination of RTE foods. The topics addressed include:

- Personnel
- The design, construction and operation of your plant
- The design, construction and maintenance of equipment, and
- Sanitation Controls

This specific document is provided to give recommendations regarding equipment and specifically addresses Sanitary Design.

Potential sources of contamination in RTE foods can include but are not limited to:

Food Contact Surfaces

- Fibrous and porous-type conveyor belts
- Filling and packaging equipment
- Work Tables
- Belts, peelers and collators
- Containers, bins, tubs, baskets
- Slicers, dicers, shredders and blenders
- Utensils
- Gloves

Non-contact Surfaces

- In-floor weighing equipment
- Cracked hoses
- Hollow rollers for conveyances
- Equipment framework
- Open bearings
- Motor housings
- Maintenance tools (screwdrivers, wrenches)
- On/Off switches
- Cleaning tools (brushes, brooms, scrapers)
- Condensate drip pans
- Forklifts, hand trucks, trolleys and racks
- Trash cans
- Pallets for ingredients and product

Utilities

- Compressed air systems including air filters
- Ice makers
- Refrigeration systems including freezers

Common Situations that have resulted in Contamination of RTE Foods

There are a number of scenarios that have been identified as having contributed to the microbial contamination of RTE Foods. These include but are not limited to the following:

- Used equipment is brought from storage and installed in the process line without through cleaning
- A new employee who is not properly trained is delegated to help clean process equipment
- Raw or under-processed food is brought into the area where cooked food is held
- Maintenance workers move from raw areas to packaging machines without changing clothes or properly washing their hands
- Heat exchangers become compromised (have pinhole leaks)
- Equipment parts, food bins, tubs, etc. are cleaned on the floor
- Improper use of footbaths
- Employees arrive for work in dirty clothes or boots and are not provided with a change

Who Should Follow The Guidance in this Document?

We would recommend that any processor of RTE foods would benefit by following the guidance provided by this document and other documents in this series. The guidance is especially formulated for those processors who have had products recalled or their facility closed due to microbially contaminated foods either by the FDA or NCDA&CS. However, we believe that all

RTE foods processors will benefit from following these recommendations to help avoid the product contamination/plant closure scenario.

How Does this Document Relate to the FDA GMPs and Other Regulations?

This document is not meant to provide any Guidance which contradicts FDA's GMPs. If one studies the GMPs, you find that binding requirements for the processing of food are given as shall while the non-binding recommendations are given as should. The guidance and recommendations in this document are meant to compliment those of the GMPs. Other regulations must be followed such as milk products producers must follow the Grade A Pasteurized Milk Ordinance and shellfish products producers must follow the National Shellfish Sanitation Program Model Ordinance.

Understanding Your Ingredients, Process and Finished RTE Product

One must understand their intended RTE food product thoroughly to determine the best ingredients, process and packaging. For example, products that may contain *L. monocytogenes* can be formulated with listeristatic control measures such as pH less than 4.4, water activity less than or equal to 0.92 or containing inhibitory control substances. Approved processes that have been proven in given foods to reduce viable cells of a given microbe such as Listeria with heat to reduce the viable cells by six orders of magnitude (6 D process) require great knowledge and testing to confirm validity. Storage practices for ingredients and finished product must be known and controlled. The design and construction of the plant is also important. This document especially addresses equipment issues and provides recommendations and guidance to help provide the framework for control of microbial contamination of RTE foods.

Design and Construction of Equipment and Processes

General: We recommend that all equipment purchased for an RTE food plant be designed and constructed to facilitate cleaning. The equipment should not have notches, crevices or folds where food and/or water can accumulate and allow microbial populations to accumulate and multiply.

The GMPs require that (C, Sec. 110.40) all equipment and utensils shall be so designed and of such material and workmanship as to be adequately cleanable and properly maintained. Also, that the design, construction and use shall preclude the adulteration of the food with lubricants, fuel, metal fragments, contaminated water, or any other contaminants. In addition, the equipment shall:

- Be corrosion resistant in food contact areas
- Be installed and maintained to facilitate cleaning of equipment and adjacent areas
- Be of non-toxic materials
- Resist the environment of use and action of food
- Resist cleaning compounds and sanitizing agents

All seams in food contact areas shall be smoothly bonded and maintained to minimize accumulation of food, dirt and thus minimize the opportunity for growth of microorganisms. There are some groups such as 3-A Sanitary Standards that assure such manufacturing and assure you that great thought has gone into the design. Some manufacturers offer at least two versions of the equipment, those with the seal and those without. Those without the seal often have some sanitary flaws and you should be very aware of what has caused the lack of seal.

The above references offer some vague words such as smoothly bonded and adequately cleanable that you may not fully understand. In fact, we find that inadequate equipment often is sold. Lack of proper maintenance is often another issue. You must periodically inspect and test your equipment such as leak testing of tanks for pinhole leaks which will develop after years of use and must be found and repaired.

Materials in product contact and adjacent areas generally are of stainless steel construction. While most such equipment is of Type 304 stainless steel, some products that have high acid or high salt require that construction be of Type 316L stainless steel to assure corrosion resistance. The stainless steel seams must be welded by a properly certified and trained welder. Then these seams must be ground to a No. 4 finish to eliminate any divots, crevices, or other imperfections where microbial contaminates could accumulate. You must remember that for stainless steel to remain non-corrosive, it must be thoroughly cleaned and then allowed to dry such that the passive layer is restored.

Care must also be taken in the non-food contact zones to assure cleanability. For example, the structural framework located below the product contact zone may be carbon steel. However,

the carbon steel must be properly prepared and constructed. It should be sandblasted, fabricated with smooth-ground continuous welds and then painted with FDA approved epoxy paint.

Holding, Conveying and Manufacturing Systems: The GMPs require that such systems be so constructed that they can be kept in a clean condition.

Hand Wash Stations: Hand washing stations should be equipped with hands free sinks and hands free soap and towel dispensers. Hot and cold water must be provided. Hand sanitizer dispensers should also be installed.

Refrigeration and Freezer Units: The GMPs require that refrigeration and freezer areas where foods are held be fitted with an indicating thermometer or other device to precisely measure temperature. Also, the GMPs require that such areas either have automatic temperature controls or an alarm that will indicate failure to maintain desired temperature. Shelves used in the units to refrigerate or freeze foods should be designed so that there is adequate air flow and that foods cannot be contaminated. Condensate drip pans should be adequately designing such that condensate is not allowed to flow into foods or on food contact surfaces. Fans on refrigeration/freezer units should be cleaned on a regular basis.

Instruments and Controls: The GMPs require that instruments and controls used for measuring, regulating or recording temperature, pH, acidity, water activity, or other conditions that control or prevent the growth of microorganisms in food shall be accurate and adequately maintained. Further, that the proper number for designated uses is required.

Compressed Gasses: The GMPs require that air and other gasses such as CO_2 mechanically introduced into food or used to clean food-contact surfaces or equipment shall be maintained in such a way that the food is not contaminated. Air filters have been an area where problems have been observed and demand special attention to prevent the introduction of microbial contaminants. Air filters should be replaced on a regular basis as determined by sanitary SOP.

Production and Process Controls. The GMPs require that all operations shall be conducted in accordance with adequate sanitation principles. Further, these additional requirements are mandated:

- Appropriate quality control operations shall be employed
- That food packaging materials are safe and suitable
- Sanitation is under the supervision of one or more competent individuals
- All reasonable precautions are taken
- Testing procedures shall be used to identify failures and contamination

The above are to ensure that the food is not contaminated. If contaminated, the food shall be rejected or if permissible, treated or processed to eliminate the contamination.

Specific Recommendations

Design and Construction: We recommend that all equipment you purchase and use should be designed and constructed to facilitate cleaning and minimize any areas where microbial harborage and multiplication can occur. Stainless steel (AISI 300 series or better) and food grade plastic/rubber is preferred. Painted surfaces should be avoided due to paint flaking.

Modification: We recommend that any equipment being modified be constructed in such manner as to facilitate cleaning and minimize any areas where microbial harborage and multiplication can occur. Welding should be performed by mechanics with experience in food processing equipment.

Equipment Motors and Electrical Conduit: Motors should be water proof and totally enclosed to prevent collection of organic matter and allow easy cleaning. Termed a washdown motor, a type of Totally Enclosed Fan Cooled (TEFC) specific for food processing facilities, this motor type is recommended by USDA and should use USDA approved paints when required. Electrical conduit should be spaced off walls for easy cleaning and should enter power boxes on the side or underneath the box.

Catwalk Framework, Table Legs, Conveyor Rollers and Racks: We recommend that they be constructed such that water cannot accumulate and harbor microorganisms (not hollow or foam filled). Also, that they be positioned to avoid contamination of foods or food contact surfaces. Conveyors should be designed for easy disassembly to facilitate cleaning and sanitizing. Cloth backed conveyor belts should not be used. In addition, conveyor belts should be easily dismantled without specific tools for easy cleaning.

Ladders and Stairs: We recommend that all have plates or pans with upturned edges to prevent debris from shoes falling onto the process line. Extension and step ladders should be color coded

and dedicated to specific areas of the facility.

Drains: Floor drains must be installed to ensure adequate draining in the processing area. They should be easy to clean and resistant to corrosive chemical used during cleaning and sanitizing. Installation should also be done to prevent any back-ups during normal use. We recommend that equipment not be installed over drains.

Floor Clearance: We recommend that all equipment have at least an 18 inch floor clearance for any food contact apparatus including conveyor pathways to facilitate cleaning and sanitation.

Lubricants: We recommend that all lubricants have added and approved bactericidal agents (sodium benzoate) to avoid contamination.

Evaporator Coils: We recommend that condensate be directed through hose or pipe directly to the drain.

Hose Nozzles: We recommend that hose nozzles never be allowed to remain on the floor—either fix the length or attach spring loaded retractors. Hose nozzles can be a high risk surface due to repeated hand contact. They should be cleaned and sanitized on a regular basis and replaced when necessary.

Heat Exchangers: We recommend that product pressures in heat exchangers always be highest on the product side.

Equipment Maintenance: We recommend that you have a preventive maintenance program in place that includes the following:

1. Program designed to minimize breakdowns and prevent contamination.
2. Written program for scheduled examination and attention to valves, gaskets, o-rings, pumps, screens, filters and heat exchangers.
3. Frequency for maintaining and replacement of air filters to assure proper operation
4. Tools for use in areas where RTE foods processed or exposed should be dedicated for use and washed and sanitized prior to each use.
5. Program to clean and sanitize equipment after renovation or maintenance.

Record Keeping: We recommend that you must not only have the proper procedure but also a system that reviews and documents that the SOP was followed and a record of when and who confirmed this.

Equipment in Dry Process Areas: Some areas of RTE facilities such as spice blend rooms and dry mix areas have equipment that must be maintained and cleaned in a dry manner. We recommend that appropriate measures should be developed and followed for this equipment. Cleaning can be done with vacuums or CO_2 pellet cleaners. Disinfection can follow with special wipes such as alcohol impregnated ones that do not introduce moisture into this special environment.

Sections of the GMPs (21 CFR part 110) that must be considered in all decisions regarding the maintenance of equipment used in plants producing RTE Foods include but may not be limited to the following:

110.35 (d) (1)	110.80 (b) (1)
110.40 (a)	110.40 (g)
110.80 (b) (2)	

Definitions

Clean in place (CIP) means a system to clean piping or equipment without disassembly, where interior product zones are fully exposed and soil can be washed away with a cleaning solution and then sanitized with a properly diluted sanitizer.

Clean out of place (COP) means a system used to clean parts and pieces after disassembly.

Critical food-contact surface means a surface that contacts food, or a surface from which drainage onto the food or onto surfaces that contact the food in the ordinary process when the food is not being subjected to an approved control process.

Critical non-food contact surface or area means a surface (other than food contact) that could, through action of man or equipment contaminate a food that will thereafter not be subjected to the approved control process.

Finished RTE Food means a refrigerated or frozen RTE Food that has been processed by an approved process and is packaged.

Ready-to-Eat (RTE) Food means a food that is customarily consumed without cooking by the consumer or that appears to be suitable for use without cooking.

FDA refers to the U.S. Food and Drug Administration.

NCDA&CS refers to the N.C. Department of Agriculture and Consumer Services.

We recommend that you also familiarize yourself with the definitions found in 21 CFR 110.3 which you can access on FDA's internet website for Center for Food Safety and Applied Nutrition (CFSAN).

References and Acknowledgements

Substantial portions of this document were suggested or directly obtained from FDA Draft Guidance Document: Control of Listeria monocytogenes in Refrigerated or Frozen Ready-to-Eat Foods. Feb. 2008. and the American Meat Institute Sanitary Design Checklist

Notes

Notes

Notes

Innovative Food Defense Project

Contact Dr. Cosby at 919-733-7366 (mark.cosby@ncagr.gov) for more information

Disclaimer:
Funding for this project was made possible, in part, by the Food and Drug Administration through grant 1R18FD004286-01, views expressed in written materials or publications and by speakers and moderators do not necessarily reflect the official policies of the Department of Health and Human Services; nor does any mention of trade names, commercial practices, or organization imply endorsement by the United States Government.

DRAFT GUIDANCE

12

INNOVATIVE FOOD DEFENSE PROGRAM

Sanitary Food Plant Design and Construction

Introduction

If a food processing plant and some or all of the refrigerated or frozen ready-to-eat (RTE) foods produced has been contaminated with microbial adulterants, careful steps must be taken to rid the plant of these adulterants and help prevent their recurrence. This document is provided in a series to address recommendations on controls to reduce the potential of contamination of RTE foods. The topics addressed include:

- Personnel
- The design, construction and operation of your plant
- The design, construction and maintenance of equipment, and
- Sanitation Controls

This specific document is provided to give recommendations regarding plant design and specifically addresses Sanitary Food Plant Design and Construction.

Potential sources of contamination in RTE Foods can include but are not limited to:

Food Contact Surfaces

- Fibrous and porous-type conveyor belts
- Filling and packaging equipment
- Work Tables
- Belts, peelers and collators
- Containers, bins, tubs, baskets
- Slicers, dicers, shredders and blenders
- Utensils
- Gloves

Non-contact Surfaces

- In-floor weighing equipment
- Air and water hoses
- Hollow rollers for conveyances
- Equipment framework
- Open bearings
- Motor housings
- Maintenance tools (screwdrivers, wrenches)
- On/Off switches
- Equipment control panels
- Cleaning tools (brushes, brooms, scrapers)
- Condensate drip pans
- Forklifts, hand trucks, trolleys and racks
- Trash cans
- Pallets for ingredients and product

Utilities

- Compressed air systems including air filters
- Ice makers
- Refrigeration systems including freezers

Common Situations that have resulted in Contamination of RTE Foods

There are a number of scenarios that have been identified as having contributed to the microbial contamination of RTE foods. These include but are not limited to the following:

- New or used equipment is installed in the process line without through cleaning
- A new employee who is not properly trained is delegated to help clean process equipment
- Raw or under-processed food is brought into the area where cooked food is held
- Maintenance workers move from raw areas to packaging machines without changing clothes or properly washing their hands
- Heat exchangers become compromised (have pinhole leaks)
- Equipment parts, food bins, tubs, etc. are cleaned on the floor
- Improper use of footbaths
- Employees arrive for work in dirty clothes or boots and are not provided with a change

Who Should Follow The Guidance in this Document?

We would recommend that any processor of RTE foods would benefit by following the guidance provided by this document and other documents in this series. We believe that all RTE foods

processors will benefit from following these recommendations to help avoid the product contamination/plant closure scenario.

How Does this Document Relate to the FDA GMPs and Other Regulations?

This document is not meant to provide any Guidance which contradicts FDA's GMPs. If one studies the GMPs, you find that binding requirements for the processing of food are given as shall while the non-binding recommendations are given as should. The guidance and recommendations in this document are meant to compliment those of the GMPs. Other regulations must be followed such as milk products producers must follow the Grade A Pasteurized Milk Ordinance and shellfish products producers must follow the National Shellfish Sanitation Program Model Ordinance.

Understanding Your Ingredients, Process and Finished RTE Product

One must understand their intended RTE food product thoroughly to determine the best ingredients, process and packaging. For example, products that may provide an environment for *L. monocytogenes* growth can be formulated with listeristatic control measures such as pH less than 4.4, water activity less than or equal to 0.92 or containing inhibitory control substances. Keep in mind, however, inhibiting the growth of pathogens DOES NOT guarantee the safety of the product if the pathogen is present in the product in a dormant state. This was shown all too well in the Salmonella outbreak in peanut butter of 2009.

Approved processes that have been proven in given foods to reduce viable cells of a given microbe such as Listeria with heat to reduce the viable cells by six orders of magnitude (6 D process) require great knowledge and testing to confirm validity. Storage practices for ingredients and finished product must be known and controlled. The design and construction of the plant is also important. This document especially addresses plant design and construction issues and provides recommendations and guidance to help provide the framework for control of microbial contamination of RTE foods.

Sanitary Design and Construction for RTE Food Plants Design of RTE Food Plant—

General Considerations.

We would recommend that you separate RTE food production areas from raw food areas. In general, the areas where RTE foods are prepared, processed, stored, and finished should be isolated as much as possible to reduce the potential for contamination of RTE foods via air, aerosols, employee traffic, equipment and supplies. Equipment washing areas, testing laboratories, maintenance areas, waste storage areas, offices and toilet facilities are areas that should be isolated. In addition to the isolation step, plans should be developed to assure that positive air pressure is maintained in the RTE areas. The positive pressure should be maintained with a HEPA filtered air supply.

Sections of the GMPs (21 CFR part 110) that must be considered in all decisions regarding plants producing RTE Foods include but may not be limited to the following:

110.20 (b) (2)	110.20 (b) (4)
110.20 (b) (6)	110.20 (b) (7)
110.20 (d) (4)	110.35 (a)
110.35 (c)	110.37 (b)
110.40 (a)	110.80 (b) (13)

The following specific steps provide specific guidance for the areas and operations listed:

Positive Pressure Air Supply: Areas where RTE foods are processed or exposed should have positive air pressure established by a filtered air source. The filtration to remove bacteria and molds and yeast is best accomplished by a High Efficiency Particle Air (HEPA) filter with an efficiency rating of 99.97-99.99 %. Prefilters before the HEPA filter are often required to remove gross contamination first and help extend the life of the HEPA filters. If HEPA filtration is not possible, then we would recommend that filtration be done using final filters of at least 90-95 % at 1 micron. In all cases, a very rigorous program of maintenance and replacement is necessary to protect the positive pressure air and assure that it does not become a contamination liability concern. The Raw and RTE areas should either be separated by air flow (Figure A) or by partitions (Figure B). We recommend that HEPA filtered air is directed into the RTE Processing Area and that a positive pressure be maintained at all times.

Condensate: We recommend that you design and build your facility such that condensate cannot drip into or otherwise enter any RTE foods during preparation. You need to protect foods, raw materials and packaging materials by eliminating condensate or installing cleanable and self-draining pans where it cannot be eliminated. Elimination can be accomplished by steps such as exhausting vapors from cooking areas, using dehumidifiers and providing adequate ventilation.

Standing water on floors must be avoided at all times.

Containers: We recommend that a detailed plan be established and utilized for all containers that are used in the preparation and processing areas for RTE Foods. This can be accomplished by:

- Distinguish between containers used for product, rework and waste
- Clearly label containers
- Select containers that can be easily cleaned
- Dedicate containers by function (ingredients, product, rework or waste)
- Dedicate containers by area (one set where product is processed or exposed, one set for raw product areas, and
- Use color coding by function and area to identify the containers and their intended use.

Air and Compressed Gas: We recommend that you dry and filter compressed gases and air that are used for injection into the product or for cleaning product contact surfaces. The dehydration should be done at the source of the compressed gas. The filtration should take place at the point of use utilizing a filter that will retain anything larger than 0.3 microns. These filters should be well maintained.

Construction Materials: We recommend that the materials selected and the design and construction in those areas where RTE foods are prepared processed and exposed be assessable for cleaning, resist deterioration by food, cleaners and sanitizers and prevent the harborage of microorganisms. This should include walls, floors, drains, doors, windows, and overhead fixtures in RTE foods plant areas where foods are being prepared or are exposed. Windows should not be allowed in such areas. Windows should not be allowed in production areas and in those areas where RTE foods are exposed. We do not recommend the use of wood in any area of the plant that are wet, that are wet cleaned or that would allow for the contamination of the food. Avoid painting floors, walls and equipment that are habitually wet to avoid paint chipping and flaking.

Floors require special attention due to their exposure to chemical abuse, temperature fluctuations, human and equipment traffic, and stress of heavy machinery. Floors in disrepair can very easily harbor pathogens leading to cross contamination, an area receiving increased attention from regulatory agencies. Floor to wall junctions should be beveled, not at 90% angle, and sloped toward drains. Bare concrete is porous and normal wear and tear from traffic, equipment, water pressure, and temperature variations will cause cracks and abrasions. The cracks and pores in concrete make it an ideal surface to harbor bacteria. Bare concrete is suitable for warehouses but not production areas. Recent advances in polymer technology have widened the choices for flooring. Polyurethane, vinyl esters, acrylics, and various epoxies have been developed as seamless floor coatings designed for specific purposes of nonporous, slip and chemical resistance, hygiene, resistance to repeated traffic and easy cleaning. Polyurethane concrete mixtures have been developed for food processing areas and anti-microbial additives (silver ions) can be added to flooring mixtures which are reported to inhibit bacterial growth. Some food processors still use acid brick/dairy tile flooring because of its durability but grout will loosen over time and be subject to contamination.

Design and Construction of Sanitary Equipment: We recommend you obtain and study Sanitary Equipment Design which is a companion document in this series.

Floor Drains: We recommend that floor drains be designed and installed such that standing water around drains is eliminated. In this regard we recommend that:

- Drains are accessible for cleaning and function well
- Trench drains are eliminated in RTE food areas. If not possible, that the trench drains be equipped with automatic flushing mechanisms
- Drains conform to applicable plumbing codes
- Drains do not flow to RTE food preparation areas from raw areas.
- Restrooms are downstream from RTE food areas
- Slope of floors to drains equal to or exceeds 0.25 inches per foot
- Sewer lines are not located above areas where RTE foods are processed

Ice: We recommend that you store ice and ice utensils in a manner that protects the ice from microbial contamination. Further, that ice transport systems and/or containers be clearly identified and protected.

Equipment: We recommend you obtain and study Sanitary Equipment Design which is a companion document in this series.

Equipment for Transport: Carts, forklifts, mobile racks, pallet and pallet jacks are known sources of potential contamination. Therefore, we recommend that you designate one set of such equipment to areas where RTE foods are prepared and processed. We recommend that you clean and sanitize the wheels of all transport devices before they enter areas where RTE foods are processed or exposed. Color coding should be used to identify transport items dedicated to RTE food preparation and exposure areas from those where raw materials are handled or stored.

Water Systems: Water systems should be properly designed, installed and maintained such that backflow and cross-connections between potable and non-potable water lines and systems are not allowed. Hot and cold water must be present at all hand washing stations. Hands free sinks, and hands free soap and towel dispensers should be used at every hand wash station. Also, all water treatment systems be maintained and periodically inspected such that they do not become a source of microbial contamination.

Brines and Reused Water: We recommend that you discard or decontaminate continuous use brines and recycled water that will be used in contact with RTE foods with sufficient frequency to control any organisms of concern. Recycled rinse water used in fresh produce production can become an important source of contamination if not properly decontaminated. The decontamination can be accomplished by means such as heat treatment, chlorination, UV or other effective means.

Pallets: We recommend that wood pallets not be used in RTE foods preparation areas or in areas where these foods may be exposed. Thus, only pallets made of materials and of construction that they can be washed and sanitized should be used.

Personnel: We recommend you obtain and study Personnel Sanitation which is a companion document in this series.

Sanitation: High pressure water hoses should not be used while RTE foods are exposed or after equipment has been sanitized for use. This helps prevent aerosols from contacting RTE foods, food contact surfaces, food packaging materials and personnel handling these foods. We recommend you obtain and study Sanitation and Cleaners and Sanitizers which are companion document in this series.

Sewer System: We recommend that the sewer systems be properly designed, installed and maintained such that backups are not allowed and positive sewer flow is maintained. Also, that all wastewater treatment systems be maintained and periodically inspected such that they do not become a source of microbial contamination. The drains from areas where RTE foods are processed or exposed should be located upstream from raw preparation areas, trash accumulation areas, RTE foods equipment washing and sanitation areas and personnel sanitation rooms.

Traffic Flow: To minimize the possibility of microbial contamination, we recommend that you control the traffic flow pattern for people, food products and equipment.

Dry Storage: We recommend that dry storage areas for materials and packaging always be kept dry. Forklifts and other transports from wet areas should not be allowed to wet these areas. If possible, transport necessary materials for a shift into wet areas before processing begins to help alleviate these issues. Dry powder sanitizers should be used for foot traffic areas.

Roofs: The roofs should be well designed to avoid leakage into dry storage and process areas. Periodically, the roofs should be inspected and properly maintained as necessary.

Receiving of Raw Materials and Supplies: The receipt of these materials should be properly controlled. Truck drivers should not be wandering through the facility and if necessary to enter the premises must be trained in proper sanitary practices. Dirty pallets should not be unloaded and restacked on cleaned and sanitary pallets. Door openings should be controlled by air curtains or plastic strips.

Dumpster and Refuse Areas: Areas where trash and refuse are collected can be the source of contamination. These areas should be kept clean and personnel should understand that they must not bring dirty containers back into the facility before they are cleaned and sanitized. Employees involved in these processes must clean their boots and should change their outer garments before entering the cleaner areas of the plant. Gloves should be disposed of, hands washed and new or sanitized gloves added before entering cleaner areas of the plant. It is recommended that only designated employees attend to these functions, that the containers and employee garments be color coded and that flow back and forth be minimized if possible.

Outside the Facility: Maintain the exterior of the premises to discourage rodent and insect contamination and allow proper pest control to

further help avoid these issues. No grass, weeds, water accumulation or trash should be allowed adjacent to the facility.

Wastewater Treatment/Pretreatment: If necessary, such facilities should be carefully designed and located. They should never be upwind from prevailing winds or near air intakes. Storage of sludges and residuals should be carefully controlled to avoid odors and not allow them to become reservoirs of potential microbial contamination.

Sanitizers should be carefully selected as to the chemicals chosen and the amounts used to avoid damage to the facility wastewater systems or to municipal systems (POTWs) if discharged to the same. Citric acid and Peracetic acid (PAA) have been demonstrated to have such impacts if not judiciously utilized.

Definitions

Clean in place (CIP) means a system to clean piping or equipment without disassembly, where interior product zones are fully exposed and soil can be washed away with a cleaning solution and then sanitized with a properly diluted sanitizer.

Clean out of place (COP) means a system used to clean parts and pieces after disassembly.

Critical food-contact surface means a surface that contacts food, or a surface from which drainage onto the food or onto surfaces that contact the food in the ordinary process when the food is not being subjected to an approved control process.

Critical non-food contact surface or area means a surface (other than food contact) that could, through action of man or equipment contaminate a food that will thereafter not be subjected to the approved control process.

Finished RTE Food means a refrigerated or frozen RTE Food that has been processed by an approved process and is packaged.

Ready-to-Eat (RTE) Food means a food that is customarily consumed without cooking by the consumer or that appears to be suitable for use without cooking.

FDA refers to the U.S. Food and Drug Administration.

NCDA&CS refers to the N.C. Department of Agriculture and Consumer Services.

We recommend that you also familiarize yourself with the definitions found in 21 CFR 110.3 which you can access on FDA's internet website for Center for Food Safety and Applied Nutrition (CFSAN).

References and Acknowledgements

Substantial portions of this document were suggested or directly obtained from FDA Draft Guidance Document: Control of Listeria monocytogenes in Refrigerated or Frozen Ready-to-Eat Foods. Feb. 2008

Frank Moerman. Hygienic Design of Food Processing Facilities. Food Safety Magazine. Oct./Nov. 2010.

Gregory Muddell. Facility Design: Defining Floor Coating Expectations. Food Safety Magazine. 2011.

Don Graham. Process Control—In-plant Air Handling and Food Safety: There is a Connection. Food Safety Magazine June/July 2011.

Figure A. Separation of Raw and RTE Areas by Air Flow

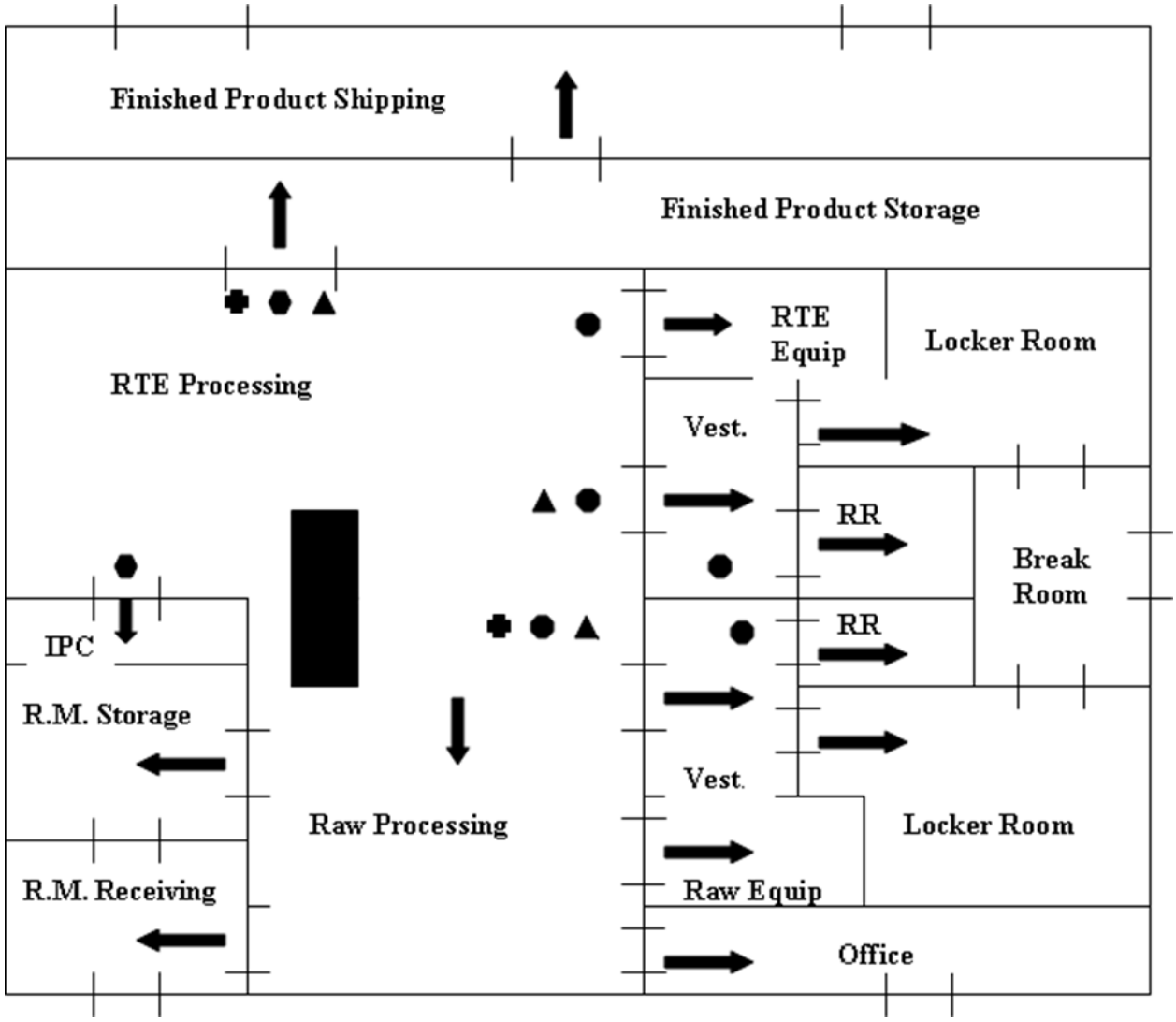

Legend

- Direction of air flow
- Hand wash station
- Footbath
- Equipment decontamination

Vest. - Vestibule

Equip - Equipment cleaning

IPC - In-process cooler

RR - Restroom

R.M. - Raw material

From FDA Draft Guidance Document: Control of Listeria monocytogenes in Refrigerated or Frozen Ready-to-Eat Foods. Feb. 2008

Figure B. Separation of Raw and RTE Areas by Partitions

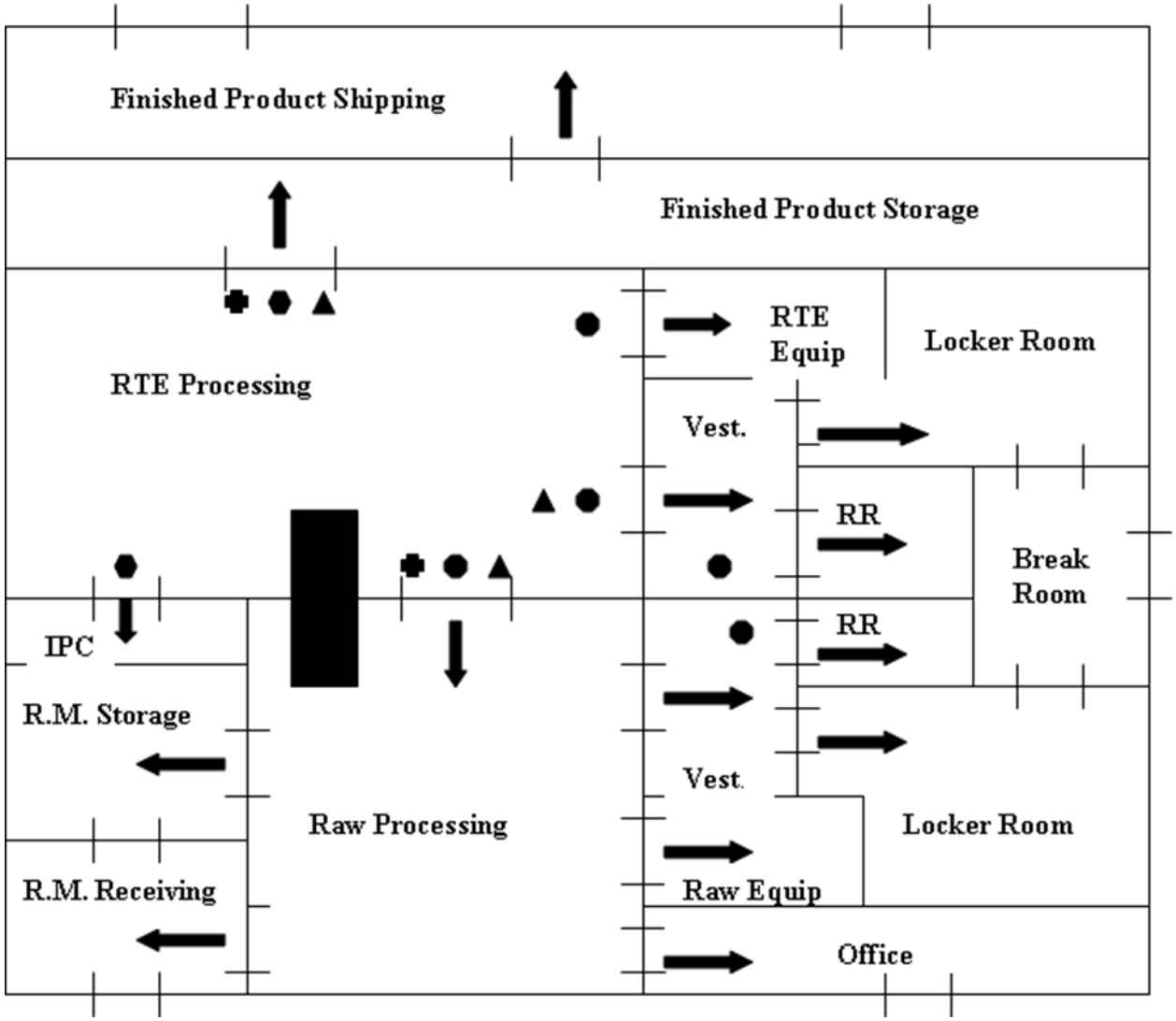

Legend

- Direction of air flow
- Hand wash station
- Footbath
- Equipment decontamination

Vest. - Vestibule

Equip - Equipment cleaning

IPC - In-process cooler

RR - Restroom

R.M. - Raw material

From FDA Draft Guidance Document: Control of Listeria monocytogenes in Refrigerated or Frozen Ready-to-Eat Foods. Feb. 2008

Notes

Innovative Food Defense Project

Contact Dr. Cosby at 919-733-7366 (mark.cosby@ncagr.gov) for more information

Disclaimer:
Funding for this project was made possible, in part, by the Food and Drug Administration through grant 1R18FD004286-01, views expressed in written materials or publications and by speakers and moderators do not necessarily reflect the official policies of the Department of Health and Human Services; nor does any mention of trade names, commercial practices, or organization imply endorsement by the United States Government.

DRAFT GUIDANCE

13

INNOVATIVE FOOD DEFENSE PROGRAM

Risk Factors and Risk Communication

Major factors of any remediation strategy are worker safety and risk communication. Normal safety precautions used during day-to-day operations of the facility are not sufficient to protect employees during a contamination event and remediation. Also, all employees should be made aware of restricted areas in the facility where remediation is taking place. All safety procedures instituted should comply with relevant OSHA, EPA and other regulatory guidelines.

Before initiating the remediation process facility managers must:

- Determine the affected areas of the facility and immediately restrict access to only qualified safety personnel until the risks can be determined
- Determine the virulence of the contaminant and risk of infection to personnel at the site
- Determine level of PPE required for personnel
- Install temporary enclosures to isolate the contaminated area(s)
- Establish standard work zone(s) for worker protection and to limit accidental spread of the contaminant
- Restrict access of the work zone(s) to only those employees involved in remediation
- Institute specific decontamination procedures for personnel, equipment, and tools leaving the contaminated area(s) as needed
- Train all remediation workers in the proper use of PPE, decontamination procedures, and restricted areas
- Establish specific exposure times for employees in the remediation zone if required
- Install air handling systems to deal with noxious fumes and dust released during the remediation process and prevent airborne contaminants from exiting the remediation area, if required
- Determine the safety risks of any chemicals or equipment to be used during the restoration process
- Establish defined area for short term storage of supplies and waste components
- Establish defined offsite area for cleaning items removed from contaminated area
- Designate employees as monitors at entry and exit sites of the remediation site to record adherence to the required safety protocols established. These individuals can also keep track of PPE supplies and proper sanitizer concentrations (e.g., footbaths)

Risk Communication

A communication team should be established to train all workers involved in the remediation of new, mandatory safety procedures, extra PPE that may be required, and the specific work zones where these extra safety measures are required. All employees not involved in remediation must be trained to avoid remediation work zones. Likewise, employees involved in the remediation process must be trained to adhere to any decontamination procedures required before exiting the remediation work zone for other areas of the facility. Likewise, it is important that the communication team ensures entry/exit monitors are well trained in their duties, especially record keeping. These records will be necessary as part of the documentation the facility presents to local, state, and federal officials prior to their approval of the remediation process and resumption of production.

In addition, the communication team may be required to deal with the media, law enforcement, and regulatory and public officials, depending on the seriousness of the contamination and distribution of the contaminated product. This

is especially important if the contamination is an intentional event. It is critical that only one individual be assigned the task of spokesperson to ensure complete, non-contradictory and consistent communication to the outside world. The communication team along with owners, managers, and supervisors will contribute to any reports required but the reporting should be assigned to one individual.

Innovative Food Defense Project

Contact Dr. Cosby at 919-733-7366 (mark.cosby@ncagr.gov) for more information

Disclaimer:
Funding for this project was made possible, in part, by the Food and Drug Administration through grant 1R18FD004286-01, views expressed in written materials or publications and by speakers and moderators do not necessarily reflect the official policies of the Department of Health and Human Services; nor does any mention of trade names, commercial practices, or organization imply endorsement by the United States Government.